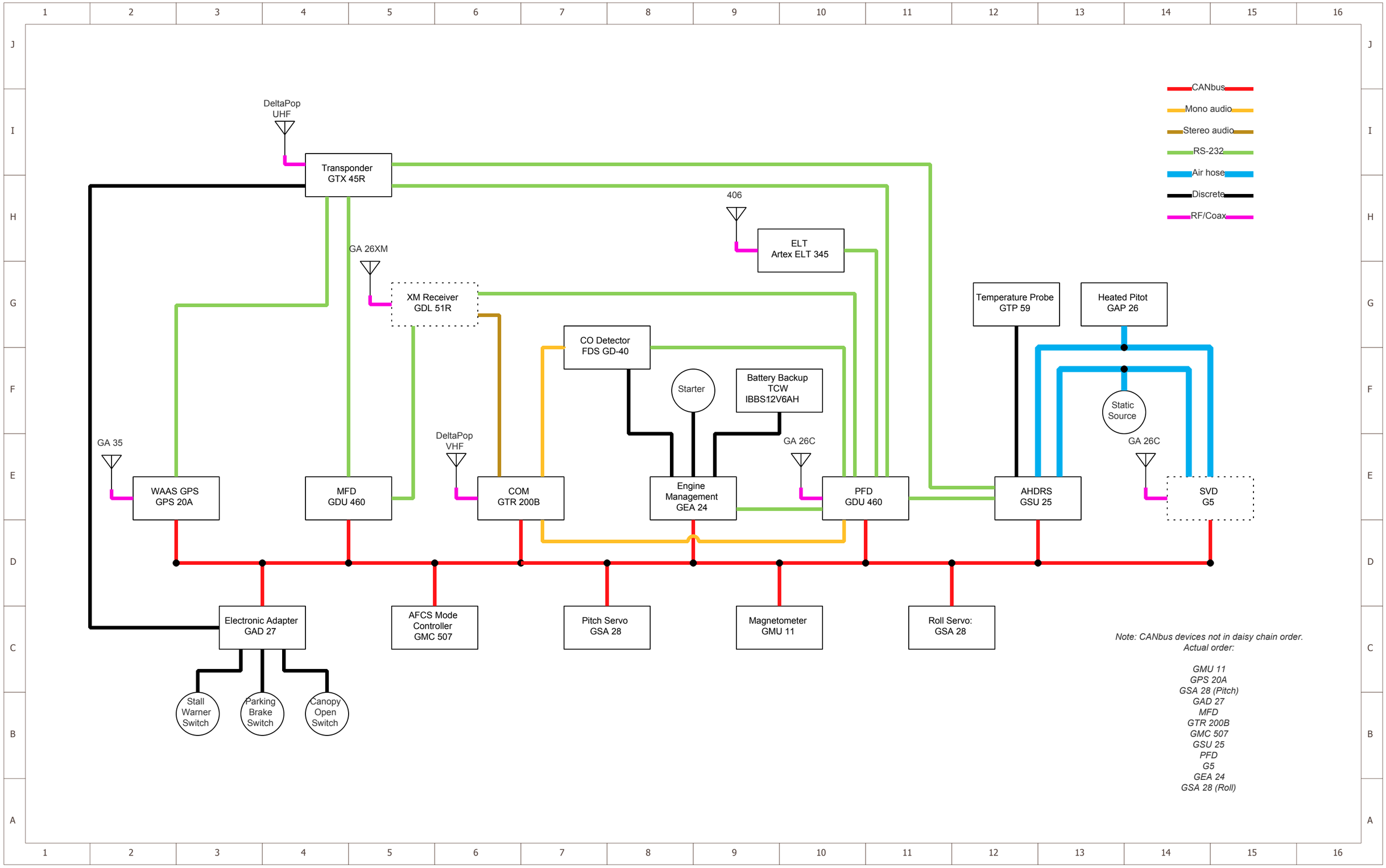
CANbus
Mono audio
Stereo audio
RS-232
Air hose
Discrete
RF/Coax
DeltaPop UHF
Transponder GTX 45R
406
ELT Artex ELT 345
GA 26XM
XM Receiver GDL 51R
CO Detector FDS GD-40
Starter
Battery Backup TCW IBBS12V6AH
Temperature Probe GTP 59
Heated Pitot GAP 26
Static Source
GA 26C
GA 35
DeltaPop VHF
GA 26C
WAAS GPS GPS 20A
MFD GDU 460
COM GTR 200B
Engine Management GEA 24
PFD GDU 460
AHDRS GSU 25
SVD G5
Electronic Adapter GAD 27
AFCS Mode Controller GMC 507
Pitch Servo GSA 28
Magnetometer GMU 11
Roll Servo: GSA 28
Stall Warner Switch
Parking Brake Switch
Canopy Open Switch
Note: CANbus devices not in daisy chain order.
Actual order:
GMU 11
GPS 20A
GSA 28 (Pitch)
GAD 27
MFD
GTR 200B
GMC 507
GSU 25
PFD
G5
GEA 24
GSA 28 (Roll)

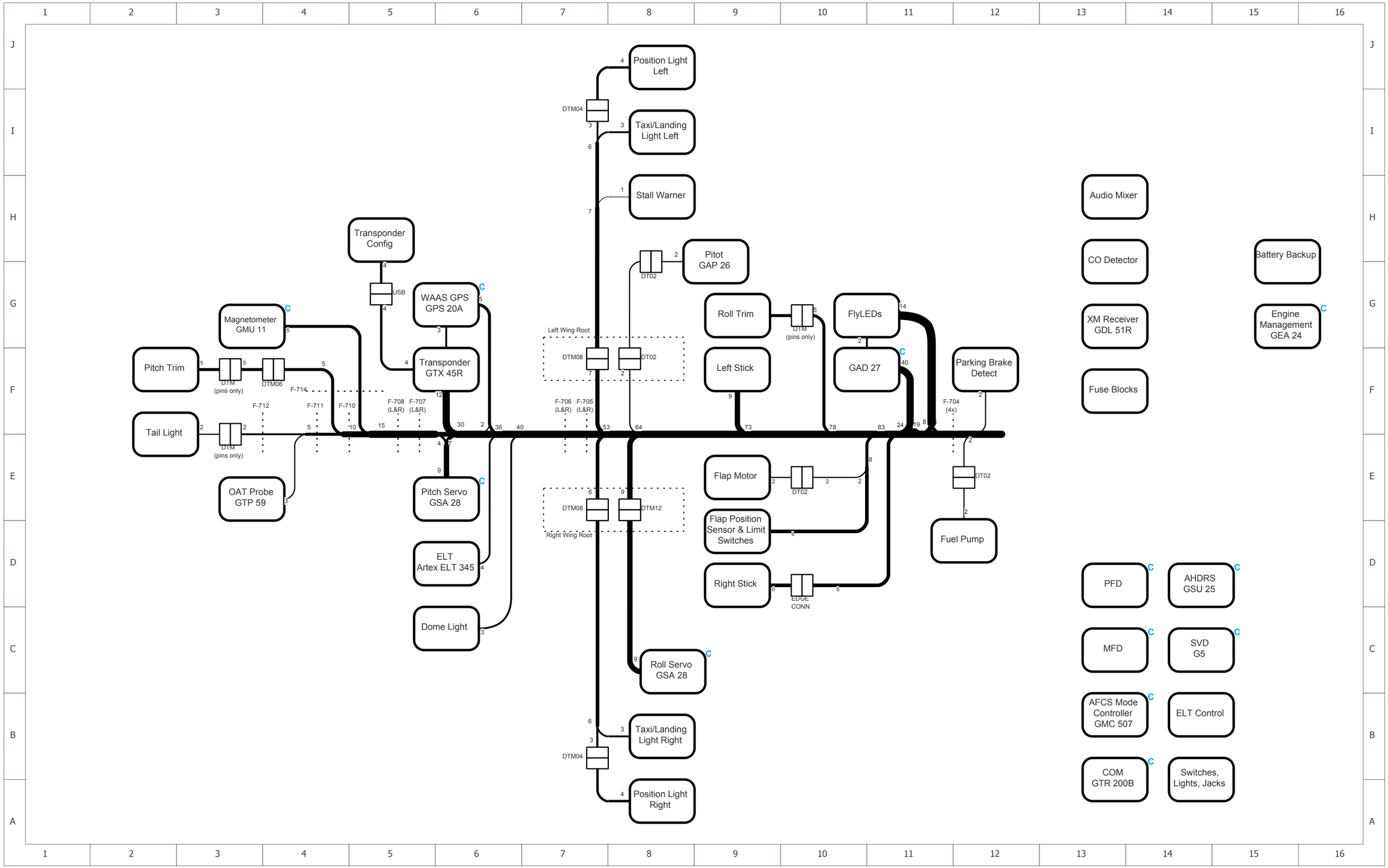
Position Light Left
DTM04
Taxi/Landing Light Left
Stall Warner
Audio Mixer
CO Detector
XM Receiver GDL 51R
Fuse Blocks
Battery Backup
Engine Management GEA 24
Transponder Config
USB
WAAS GPS GPS 20A
Pitot GAP 26
DT02
Magnetometer GMU 11
Roll Trim
DTM (pins only)
FlyLEDs
Left Wing Root
DTM08
DT02
Pitch Trim
DTM06
Transponder GTX 45R
Left Stick
GAD 27
Parking Brake Detect
F-714
F-712
F-711
F-710
F-708 (L&R)
F-707 (L&R)
F-706 (L&R)
F-705 (L&R)
F-704 (4x)
Tail Light
Flap Motor
OAT Probe GTP 59
Pitch Servo GSA 28
DTM12
Flap Position Sensor & Limit Switches
Fuel Pump
Right Wing Root
ELT Artex ELT 345
Right Stick
EDGE CONN
PFD
AHDRS GSU 25
Dome Light
MFD
SVD G5
Roll Servo GSA 28
AFCS Mode Controller GMC 507
ELT Control
Taxi/Landing Light Right
COM GTR 200B
Switches, Lights, Jacks
Position Light Right

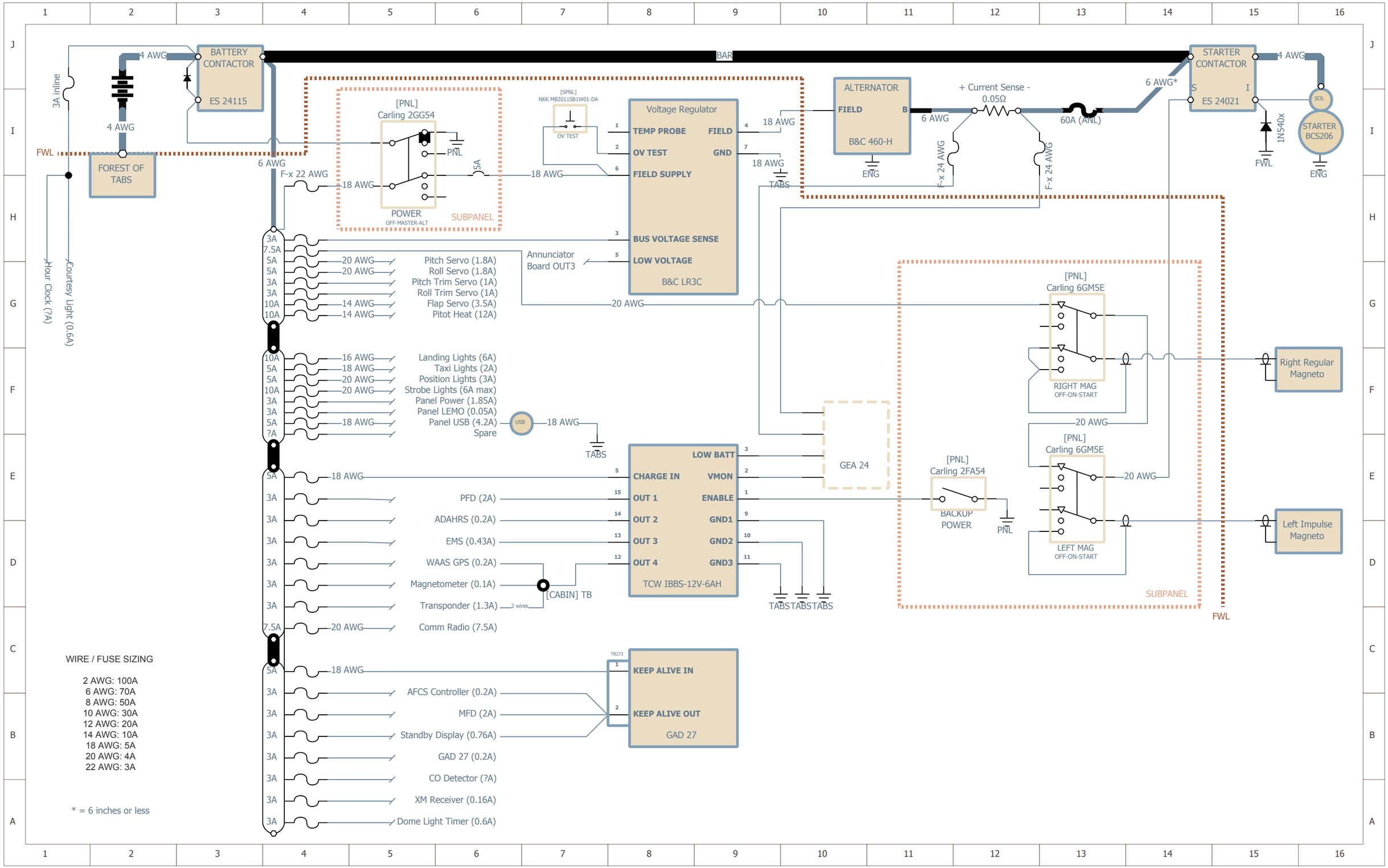
BAR
BATTERY CONTACTOR
ES 24115
4 AWG
3A inline
FWL
FOREST OF TABS
6 AWG
F-x 22 AWG
[PNL]
Carling 2GG54
POWER
OFF-MASTER-ALT
SUBPANEL
PNL
5A
18 AWG
[SPNL]
NKK MB2011SB1W01-DA
OV TEST
Voltage Regulator
TEMP PROBE
OV TEST
FIELD SUPPLY
BUS VOLTAGE SENSE
LOW VOLTAGE
FIELD
GND
B&C LR3C
TABS
ALTERNATOR
FIELD
B
B&C 460-H
ENG
6 AWG
+ Current Sense -
0.05Ω
60A (ANL)
F-x 24 AWG
6 AWG*
STARTER CONTACTOR
ES 24021
S
I
1N540x
SOL
STARTER BCS206
Hour Clock (?A)
Courtesy Light (0.6A)
Pitch Servo (1.8A)
Roll Servo (1.8A)
Pitch Trim Servo (1A)
Roll Trim Servo (1A)
Flap Servo (3.5A)
Pitot Heat (12A)
Annunciator Board OUT3
20 AWG
14 AWG
Landing Lights (6A)
Taxi Lights (2A)
Position Lights (3A)
Strobe Lights (6A max)
Panel Power (1.85A)
Panel LEMO (0.05A)
Panel USB (4.2A)
Spare
USB
PFD (2A)
ADAHRS (0.2A)
EMS (0.43A)
WAAS GPS (0.2A)
Magnetometer (0.1A)
Transponder (1.3A)
2 wires
Comm Radio (7.5A)
[CABIN] TB
CHARGE IN
OUT 1
OUT 2
OUT 3
OUT 4
LOW BATT
VMON
ENABLE
GND1
GND2
GND3
TCW IBBS-12V-6AH
GEA 24
[PNL]
Carling 6GM5E
RIGHT MAG
OFF-ON-START
Right Regular Magneto
[PNL]
Carling 2FA54
BACKUP POWER
LEFT MAG
Left Impulse Magneto
TB273
KEEP ALIVE IN
KEEP ALIVE OUT
GAD 27
AFCS Controller (0.2A)
MFD (2A)
Standby Display (0.76A)
GAD 27 (0.2A)
CO Detector (?A)
XM Receiver (0.16A)
Dome Light Timer (0.6A)
WIRE / FUSE SIZING
2 AWG: 100A
6 AWG: 70A
8 AWG: 50A
10 AWG: 30A
12 AWG: 20A
14 AWG: 10A
18 AWG: 5A
20 AWG: 4A
22 AWG: 3A
* = 6 inches or less

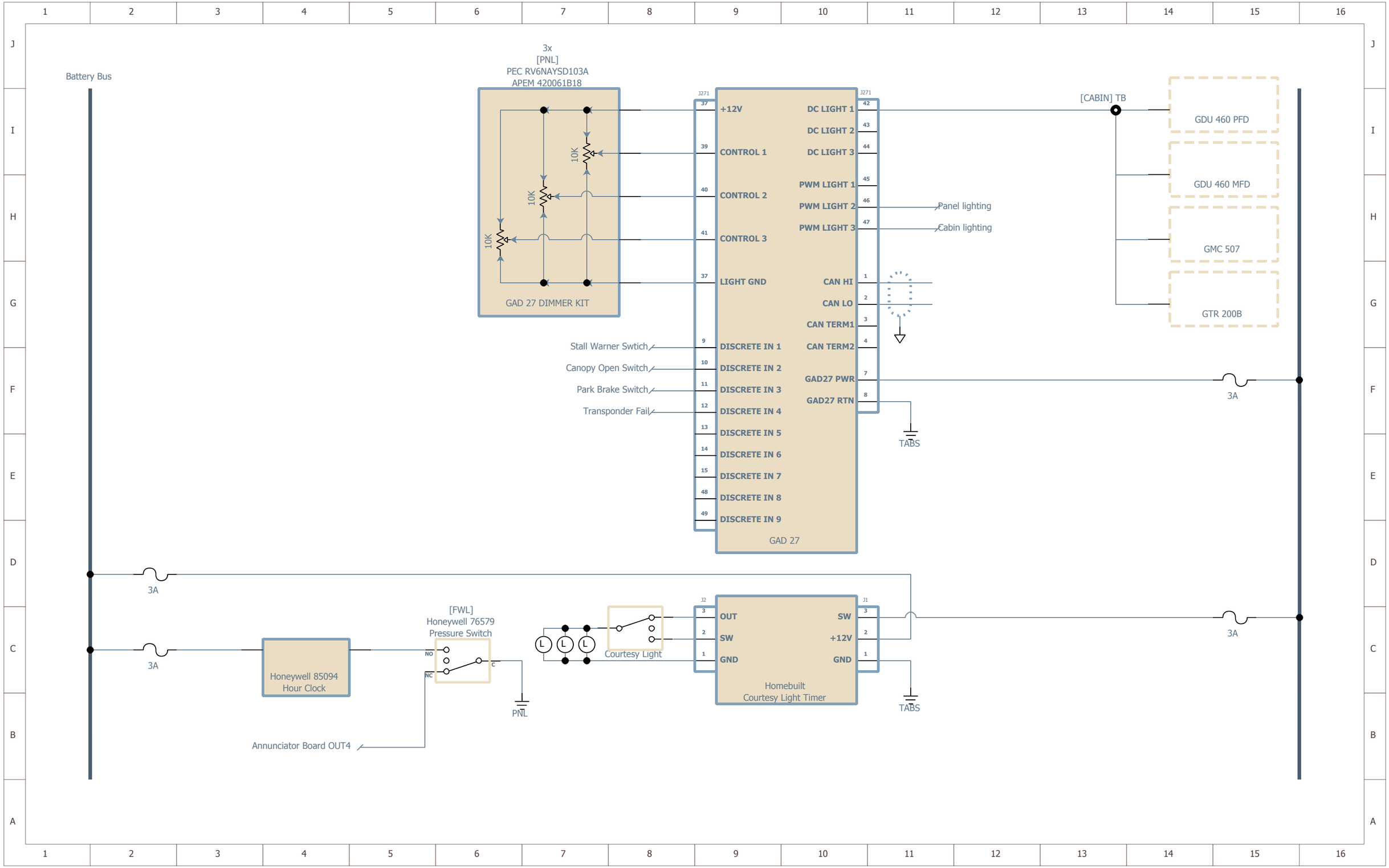
Battery Bus
3x
[PNL]
PEC RV6NAYSD103A
APEM 420061B18
10K
10K
10K
GAD 27 DIMMER KIT
J271
+12V
CONTROL 1
CONTROL 2
CONTROL 3
LIGHT GND
DISCRETE IN 1
DISCRETE IN 2
DISCRETE IN 3
DISCRETE IN 4
DISCRETE IN 5
DISCRETE IN 6
DISCRETE IN 7
DISCRETE IN 8
DISCRETE IN 9
DC LIGHT 1
DC LIGHT 2
DC LIGHT 3
PWM LIGHT 1
PWM LIGHT 2
PWM LIGHT 3
CAN HI
CAN LO
CAN TERM1
CAN TERM2
GAD27 PWR
GAD27 RTN
GAD 27
Stall Warner Swtich
Canopy Open Switch
Park Brake Switch
Transponder Fail
Panel lighting
Cabin lighting
TABS
[CABIN] TB
GDU 460 PFD
GDU 460 MFD
GMC 507
GTR 200B
3A
3A
3A
3A
Honeywell 85094
Hour Clock
[FWL]
Honeywell 76579
Pressure Switch
NO
NC
C
PNL
Annunciator Board OUT4
Courtesy Light
J2
OUT
SW
GND
J1
SW
+12V
GND
Homebuilt
Courtesy Light Timer
TABS

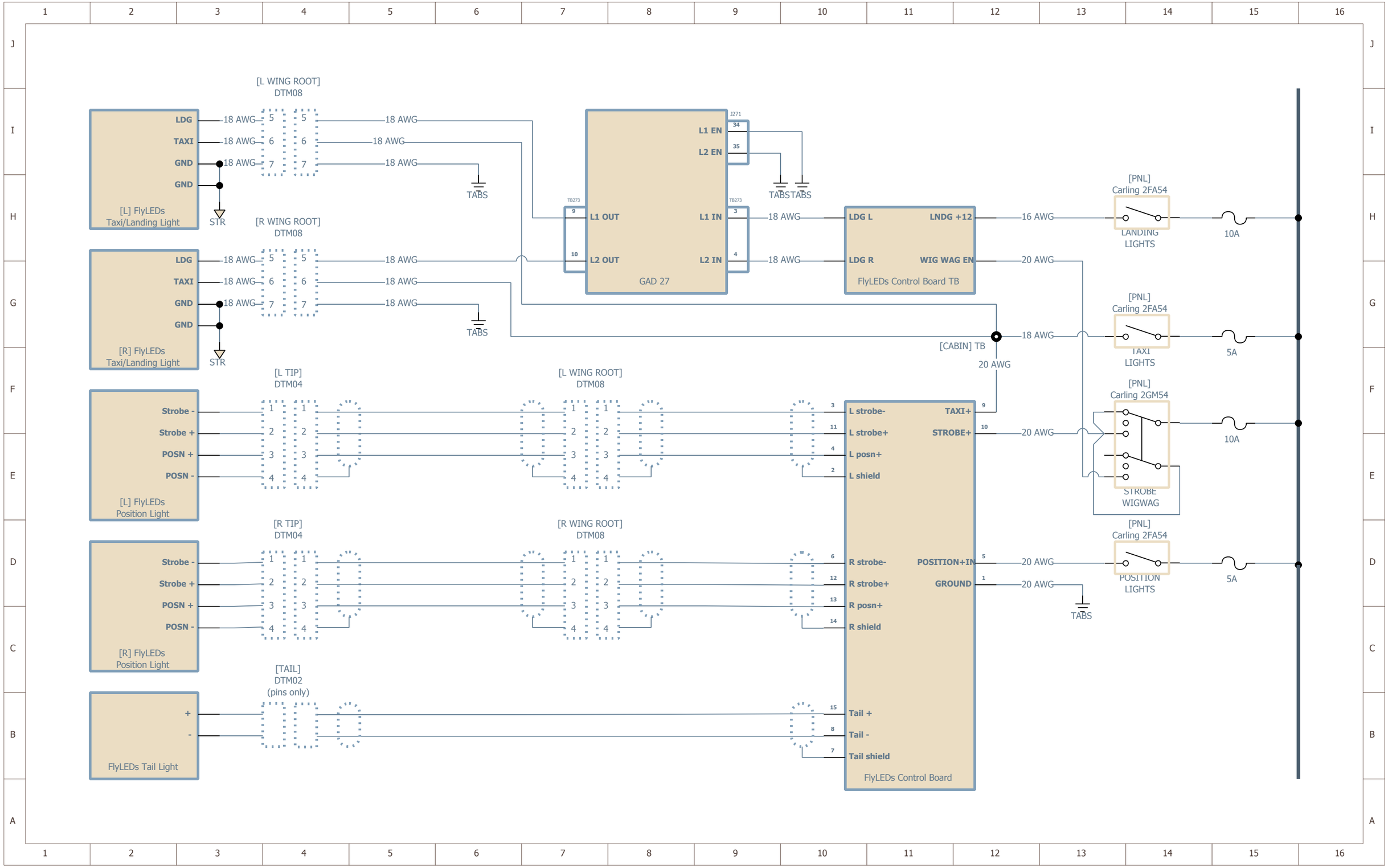
[L WING ROOT]
DTM08
LDG
TAXI
GND
GND
[L] FlyLEDs
Taxi/Landing Light
STR
18 AWG
[R WING ROOT]
DTM08
[R] FlyLEDs
Taxi/Landing Light
[L TIP]
DTM04
[L WING ROOT]
DTM08
Strobe -
Strobe +
POSN +
POSN -
[L] FlyLEDs
Position Light
[R TIP]
DTM04
[R WING ROOT]
DTM08
[R] FlyLEDs
Position Light
[TAIL]
DTM02
(pins only)
+
-
FlyLEDs Tail Light
TABS
L1 EN
L2 EN
L1 OUT
L2 OUT
L1 IN
L2 IN
GAD 27
LDG L
LNDG +12
LDG R
WIG WAG EN
FlyLEDs Control Board TB
16 AWG
20 AWG
[CABIN] TB
[PNL]
Carling 2FA54
LANDING
LIGHTS
10A
TAXI
LIGHTS
5A
Carling 2GM54
STROBE
WIGWAG
POSITION
LIGHTS
L strobe-
L strobe+
L posn+
L shield
R strobe-
R strobe+
R posn+
R shield
Tail +
Tail -
Tail shield
TAXI+
STROBE+
POSITION+IN
GROUND
FlyLEDs Control Board

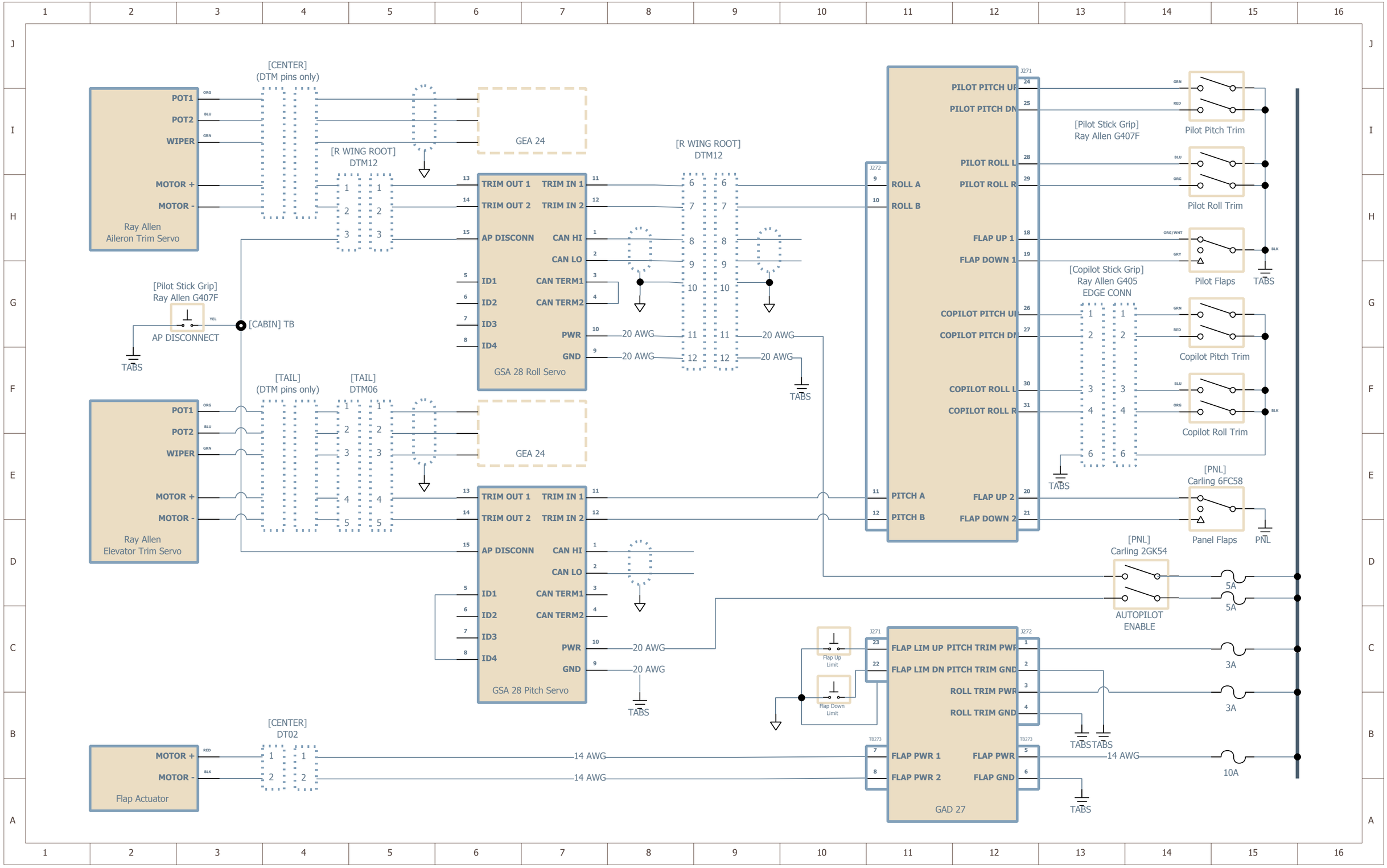
Ray Allen
Aileron Trim Servo
POT1
POT2
WIPER
MOTOR +
MOTOR -
[CENTER]
(DTM pins only)
[R WING ROOT]
DTM12
GEA 24
TRIM OUT 1
TRIM OUT 2
AP DISCONN
ID1
ID2
ID3
ID4
TRIM IN 1
TRIM IN 2
CAN HI
CAN LO
CAN TERM1
CAN TERM2
PWR
GND
GSA 28 Roll Servo
20 AWG
TABS
[Pilot Stick Grip]
Ray Allen G407F
AP DISCONNECT
[CABIN] TB
[TAIL]
(DTM pins only)
[TAIL]
DTM06
Ray Allen
Elevator Trim Servo
GSA 28 Pitch Servo
[CENTER]
DT02
Flap Actuator
14 AWG
J271
J272
PILOT PITCH UP
PILOT PITCH DN
PILOT ROLL L
PILOT ROLL R
FLAP UP 1
FLAP DOWN 1
COPILOT PITCH UP
COPILOT PITCH DN
COPILOT ROLL L
COPILOT ROLL R
ROLL A
ROLL B
PITCH A
PITCH B
FLAP UP 2
FLAP DOWN 2
Pilot Pitch Trim
Pilot Roll Trim
Pilot Flaps
[Copilot Stick Grip]
Ray Allen G405
EDGE CONN
Copilot Pitch Trim
Copilot Roll Trim
[PNL]
Carling 6FC58
Panel Flaps
PNL
[PNL]
Carling 2GK54
AUTOPILOT
ENABLE
5A
3A
10A
Flap Up
Limit
Flap Down
Limit
FLAP LIM UP
FLAP LIM DN
PITCH TRIM PWR
PITCH TRIM GND
ROLL TRIM PWR
ROLL TRIM GND
FLAP PWR 1
FLAP PWR 2
FLAP PWR
FLAP GND
GAD 27

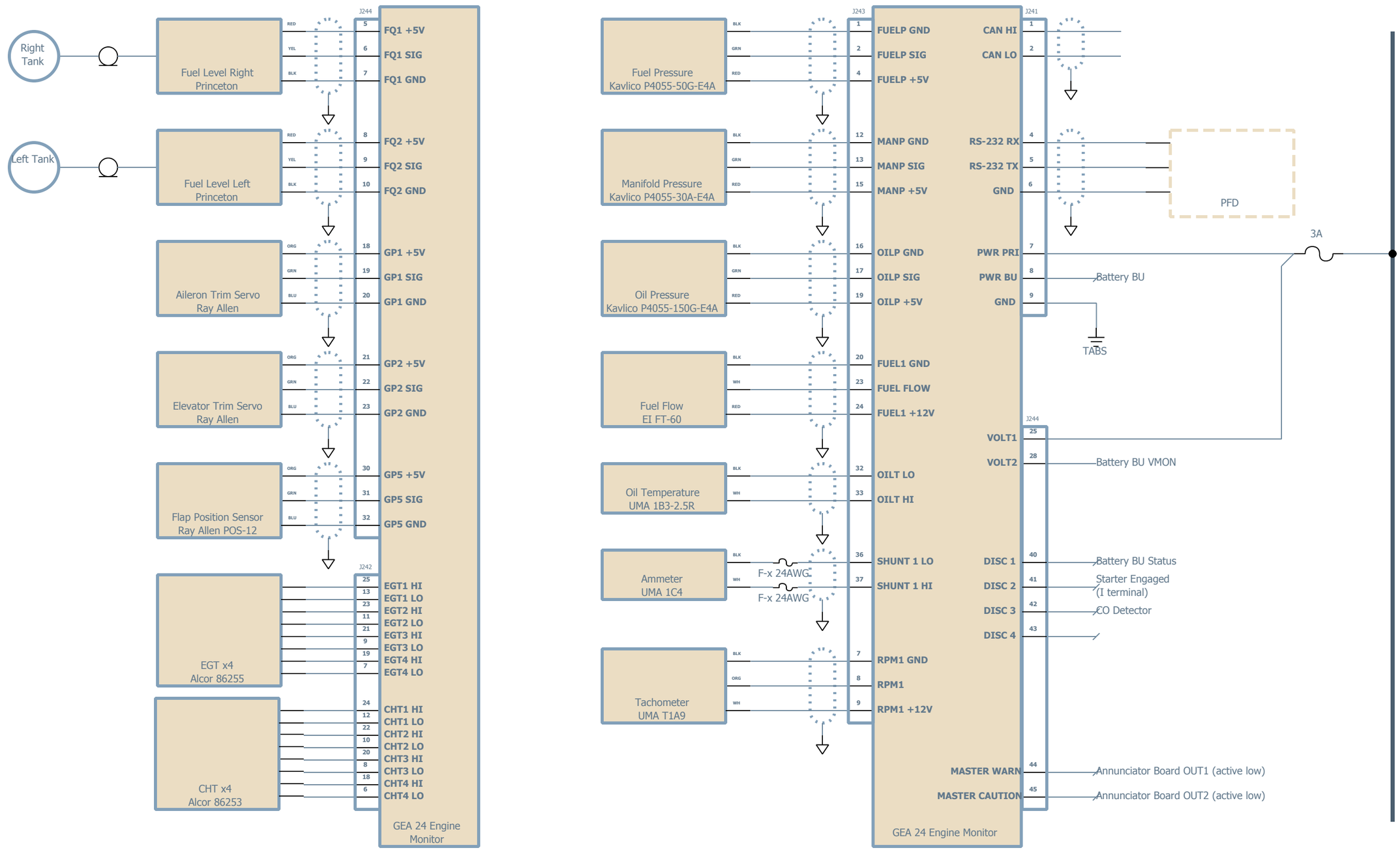
Right Tank
Left Tank
Fuel Level Right Princeton
Fuel Level Left Princeton
Aileron Trim Servo Ray Allen
Elevator Trim Servo Ray Allen
Flap Position Sensor Ray Allen POS-12
EGT x4 Alcor 86255
CHT x4 Alcor 86253
J244
FQ1 +5V
FQ1 SIG
FQ1 GND
FQ2 +5V
FQ2 SIG
FQ2 GND
GP1 +5V
GP1 SIG
GP1 GND
GP2 +5V
GP2 SIG
GP2 GND
GP5 +5V
GP5 SIG
GP5 GND
J242
EGT1 HI
EGT1 LO
EGT2 HI
EGT2 LO
EGT3 HI
EGT3 LO
EGT4 HI
EGT4 LO
CHT1 HI
CHT1 LO
CHT2 HI
CHT2 LO
CHT3 HI
CHT3 LO
CHT4 HI
CHT4 LO
GEA 24 Engine Monitor
Fuel Pressure Kavlico P4055-50G-E4A
Manifold Pressure Kavlico P4055-30A-E4A
Oil Pressure Kavlico P4055-150G-E4A
Fuel Flow EI FT-60
Oil Temperature UMA 1B3-2.5R
Ammeter UMA 1C4
Tachometer UMA T1A9
F-x 24AWG
F-x 24AWG
J243
FUELP GND
FUELP SIG
FUELP +5V
MANP GND
MANP SIG
MANP +5V
OILP GND
OILP SIG
OILP +5V
FUEL1 GND
FUEL FLOW
FUEL1 +12V
OILT LO
OILT HI
SHUNT 1 LO
SHUNT 1 HI
RPM1 GND
RPM1
RPM1 +12V
J241
CAN HI
CAN LO
RS-232 RX
RS-232 TX
GND
PWR PRI
PWR BU
GND
J244
VOLT1
VOLT2
DISC 1
DISC 2
DISC 3
DISC 4
MASTER WARN
MASTER CAUTION
GEA 24 Engine Monitor
PFD
3A
Battery BU
TABS
Battery BU VMON
Battery BU Status
Starter Engaged (I terminal)
CO Detector
Annunciator Board OUT1 (active low)
Annunciator Board OUT2 (active low)

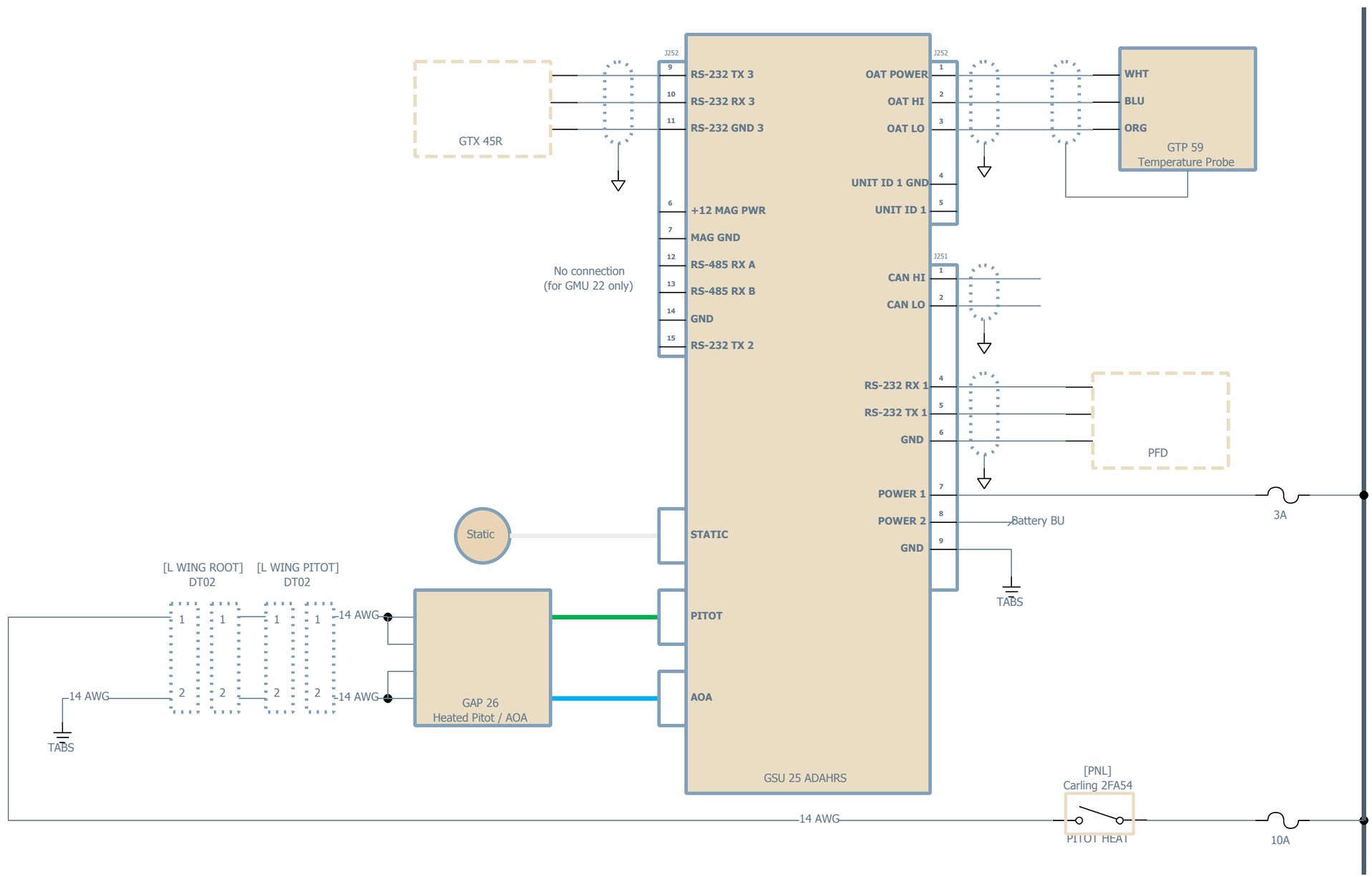
GTX 45R
J252
9
10
11
RS-232 TX 3
RS-232 RX 3
RS-232 GND 3
6
7
12
13
14
15
+12 MAG PWR
MAG GND
RS-485 RX A
RS-485 RX B
GND
RS-232 TX 2
No connection
(for GMU 22 only)
J252
OAT POWER
OAT HI
OAT LO
UNIT ID 1 GND
UNIT ID 1
WHT
BLU
ORG
GTP 59
Temperature Probe
J251
CAN HI
CAN LO
RS-232 RX 1
RS-232 TX 1
GND
PFD
POWER 1
POWER 2
GND
Battery BU
3A
TABS
Static
STATIC
PITOT
AOA
[L WING ROOT]
DT02
[L WING PITOT]
DT02
14 AWG
GAP 26
Heated Pitot / AOA
GSU 25 ADAHRS
[PNL]
Carling 2FA54
PITOT HEAT
10A

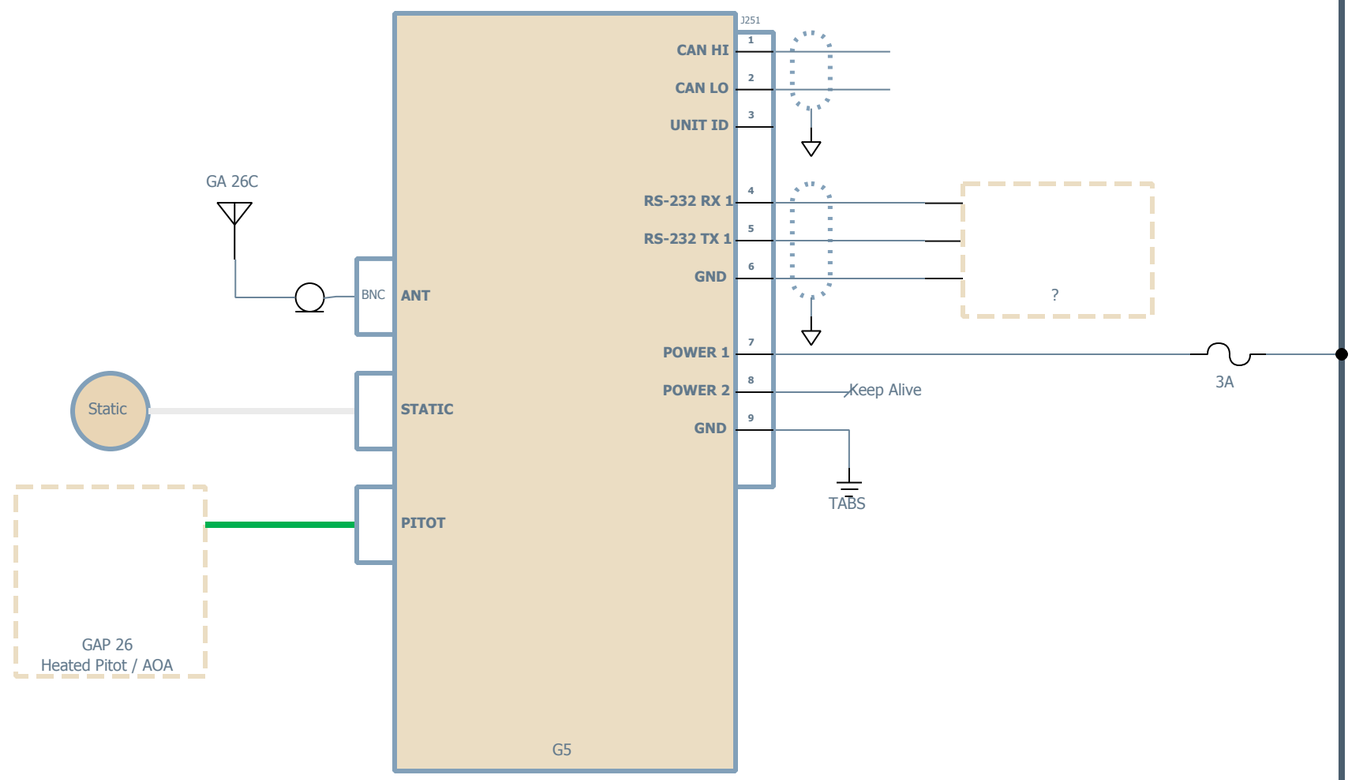
J251
CAN HI
CAN LO
UNIT ID
RS-232 RX 1
RS-232 TX 1
GND
POWER 1
POWER 2
GND
1
2
3
4
5
6
7
8
9
GA 26C
BNC
ANT
Static
STATIC
PITOT
GAP 26
Heated Pitot / AOA
G5
?
Keep Alive
TABS
3A

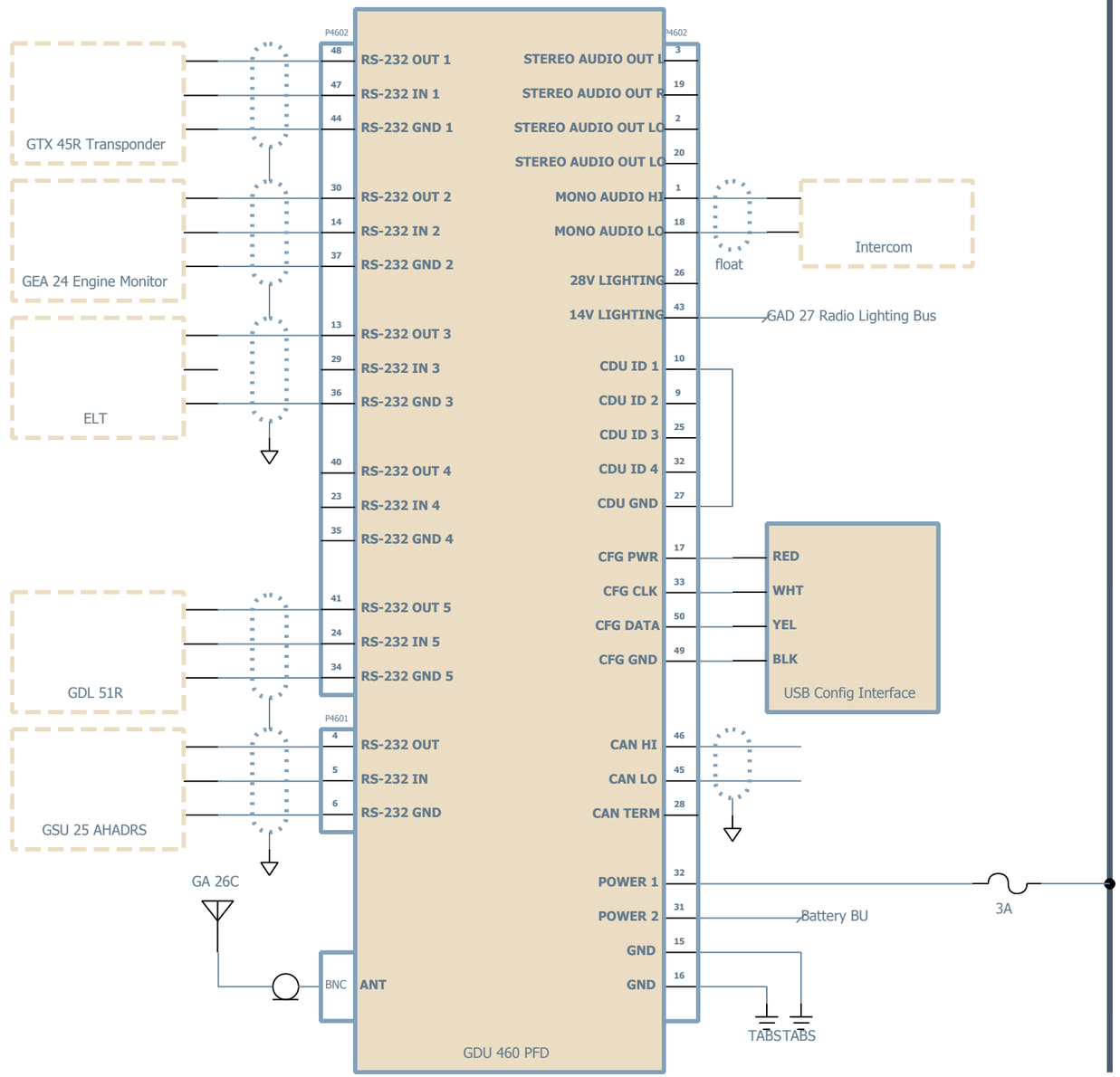
GTX 45R Transponder
GEA 24 Engine Monitor
ELT
GDL 51R
GSU 25 AHADRS
GA 26C
P4602
48 RS-232 OUT 1
47 RS-232 IN 1
44 RS-232 GND 1
30 RS-232 OUT 2
14 RS-232 IN 2
37 RS-232 GND 2
13 RS-232 OUT 3
29 RS-232 IN 3
36 RS-232 GND 3
40 RS-232 OUT 4
23 RS-232 IN 4
35 RS-232 GND 4
41 RS-232 OUT 5
24 RS-232 IN 5
34 RS-232 GND 5
P4601
4 RS-232 OUT
5 RS-232 IN
6 RS-232 GND
BNC ANT
STEREO AUDIO OUT L 3
STEREO AUDIO OUT R 19
STEREO AUDIO OUT LO 2
STEREO AUDIO OUT LO 20
MONO AUDIO HI 1
MONO AUDIO LO 18
28V LIGHTING 26
14V LIGHTING 43
CDU ID 1 10
CDU ID 2 9
CDU ID 3 25
CDU ID 4 32
CDU GND 27
CFG PWR 17
CFG CLK 33
CFG DATA 50
CFG GND 49
CAN HI 46
CAN LO 45
CAN TERM 28
POWER 1 32
POWER 2 31
GND 15
GND 16
GDU 460 PFD
float
Intercom
GAD 27 Radio Lighting Bus
RED
WHT
YEL
BLK
USB Config Interface
Battery BU
3A
TABS
TABS

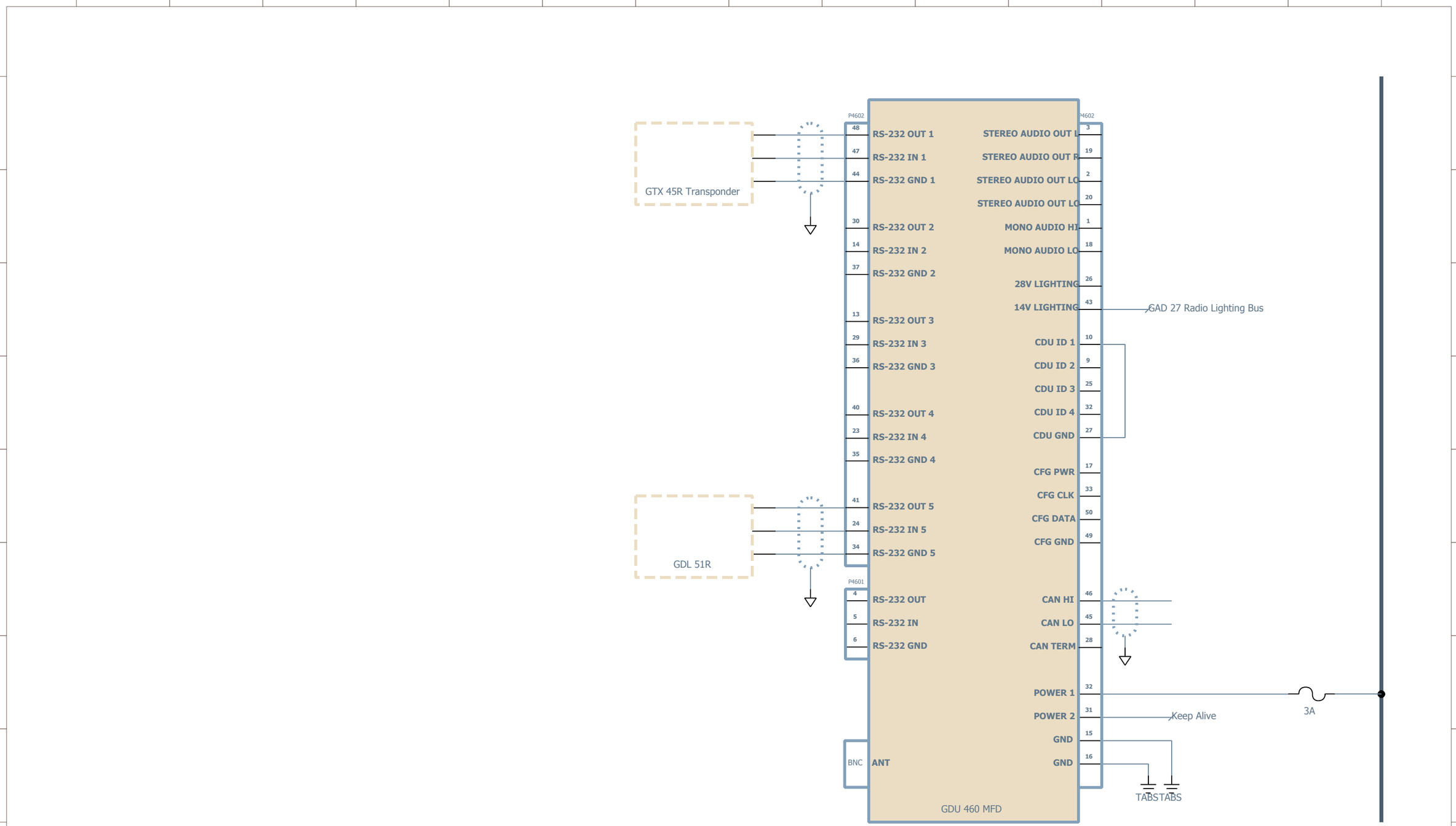
GTX 45R Transponder
GDL 51R
P4602
48 RS-232 OUT 1
47 RS-232 IN 1
44 RS-232 GND 1
30 RS-232 OUT 2
14 RS-232 IN 2
37 RS-232 GND 2
13 RS-232 OUT 3
29 RS-232 IN 3
36 RS-232 GND 3
40 RS-232 OUT 4
23 RS-232 IN 4
35 RS-232 GND 4
41 RS-232 OUT 5
24 RS-232 IN 5
34 RS-232 GND 5
P4601
4 RS-232 OUT
5 RS-232 IN
6 RS-232 GND
BNC ANT
STEREO AUDIO OUT L 3
STEREO AUDIO OUT R 19
STEREO AUDIO OUT LO 2
STEREO AUDIO OUT LO 20
MONO AUDIO HI 1
MONO AUDIO LO 18
28V LIGHTING 26
14V LIGHTING 43
GAD 27 Radio Lighting Bus
CDU ID 1 10
CDU ID 2 9
CDU ID 3 25
CDU ID 4 32
CDU GND 27
CFG PWR 17
CFG CLK 33
CFG DATA 50
CFG GND 49
CAN HI 46
CAN LO 45
CAN TERM 28
POWER 1 32
POWER 2 31
Keep Alive
GND 15
GND 16
3A
TABS
TABS
GDU 460 MFD

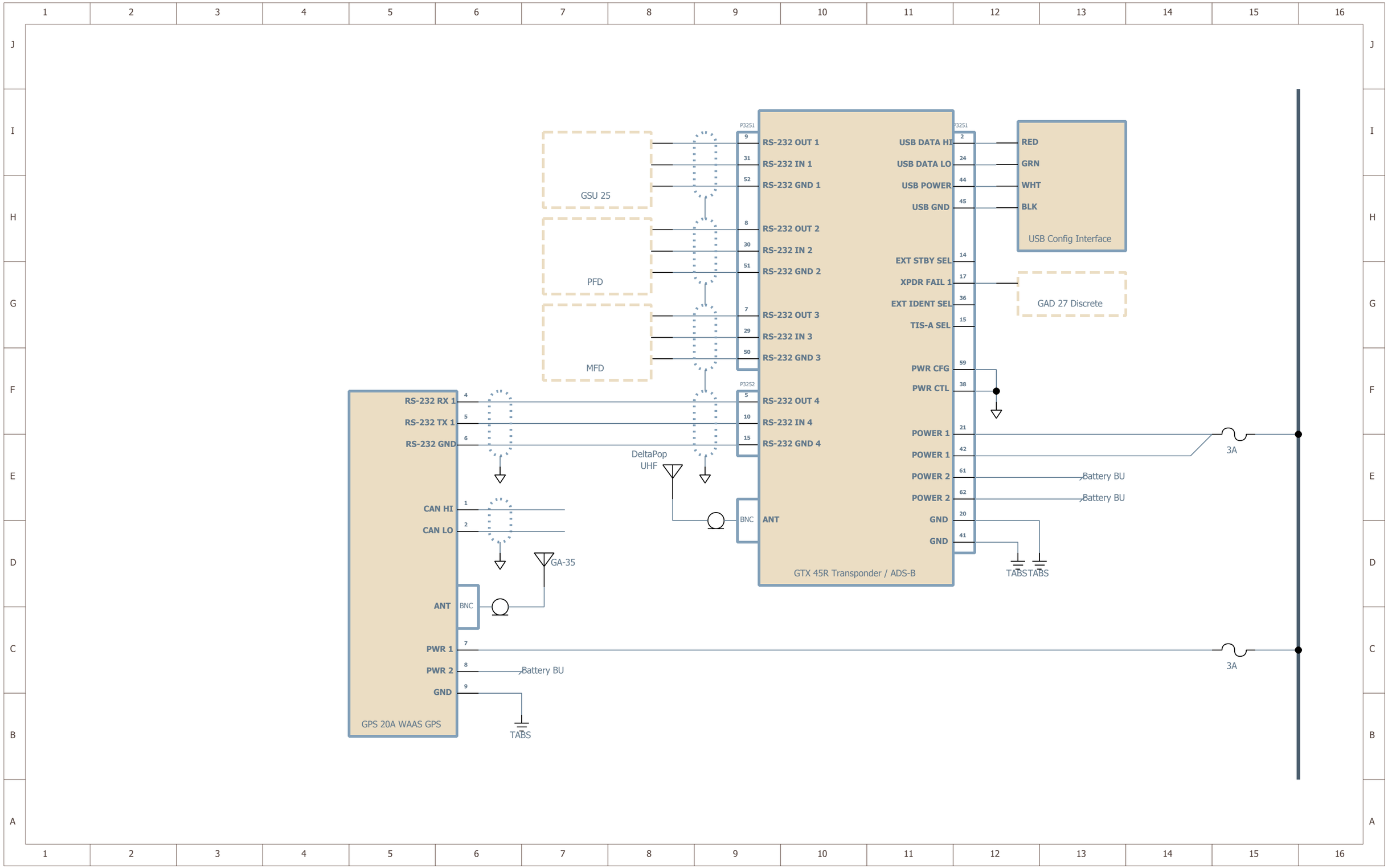
GSU 25
PFD
MFD
P3251
RS-232 OUT 1
RS-232 IN 1
RS-232 GND 1
RS-232 OUT 2
RS-232 IN 2
RS-232 GND 2
RS-232 OUT 3
RS-232 IN 3
RS-232 GND 3
P3252
RS-232 OUT 4
RS-232 IN 4
RS-232 GND 4
USB DATA HI
USB DATA LO
USB POWER
USB GND
RED
GRN
WHT
BLK
USB Config Interface
EXT STBY SEL
XPDR FAIL 1
EXT IDENT SEL
TIS-A SEL
GAD 27 Discrete
PWR CFG
PWR CTL
POWER 1
POWER 1
POWER 2
POWER 2
GND
GND
3A
Battery BU
Battery BU
TABS
TABS
DeltaPop
UHF
BNC
ANT
GTX 45R Transponder / ADS-B
RS-232 RX 1
RS-232 TX 1
RS-232 GND
CAN HI
CAN LO
GA-35
ANT
BNC
PWR 1
PWR 2
GND
Battery BU
GPS 20A WAAS GPS
TABS
3A

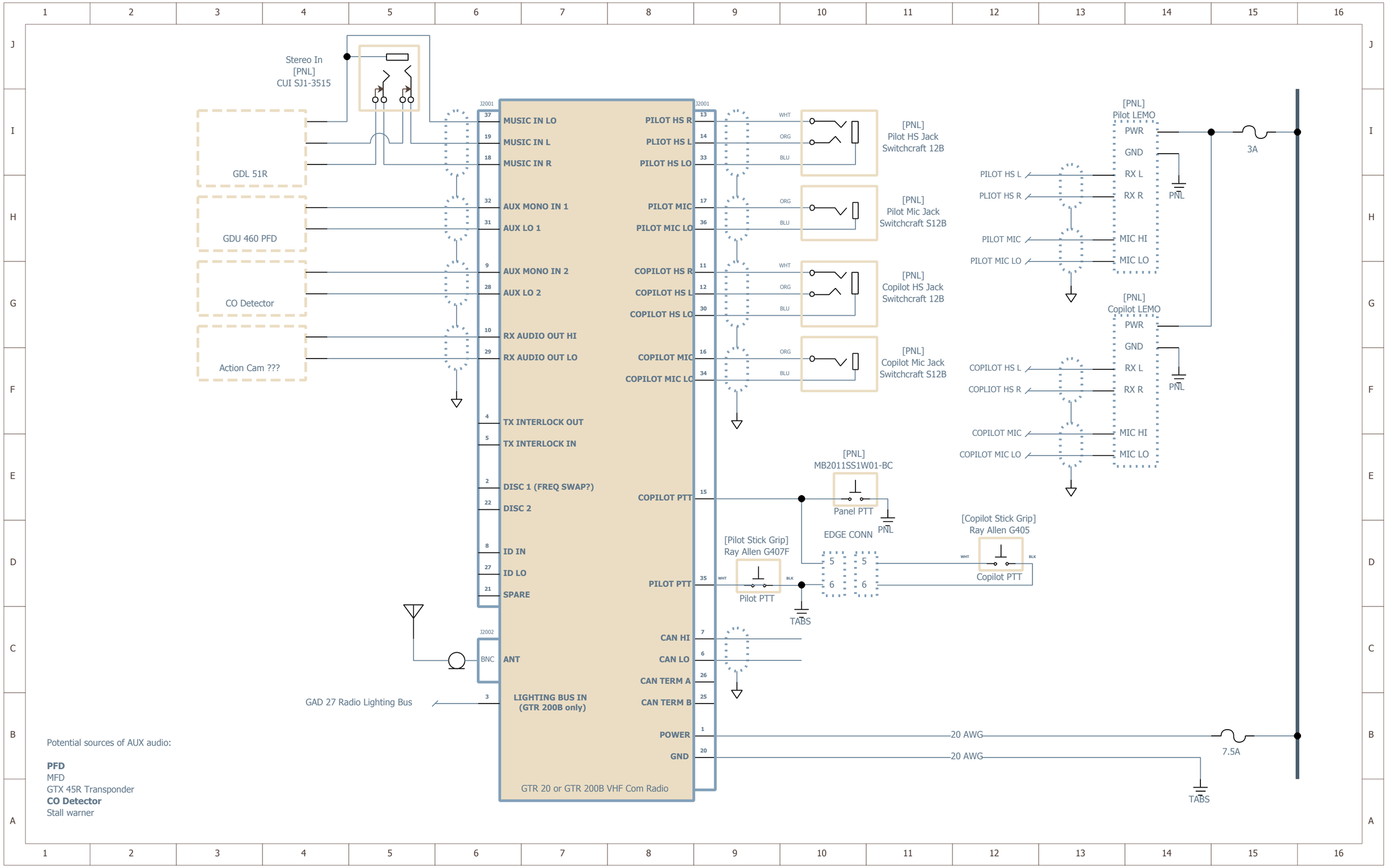
Stereo In
[PNL]
CUI SJ1-3515
GDL 51R
GDU 460 PFD
CO Detector
Action Cam ???
J2001
MUSIC IN LO
MUSIC IN L
MUSIC IN R
AUX MONO IN 1
AUX LO 1
AUX MONO IN 2
AUX LO 2
RX AUDIO OUT HI
RX AUDIO OUT LO
TX INTERLOCK OUT
TX INTERLOCK IN
DISC 1 (FREQ SWAP?)
DISC 2
ID IN
ID LO
SPARE
J2002
BNC
ANT
GAD 27 Radio Lighting Bus
LIGHTING BUS IN
(GTR 200B only)
PILOT HS R
PLIOT HS L
PILOT HS LO
PILOT MIC
PILOT MIC LO
COPILOT HS R
COPILOT HS L
COPILOT HS LO
COPILOT MIC
COPILOT MIC LO
COPILOT PTT
PILOT PTT
CAN HI
CAN LO
CAN TERM A
CAN TERM B
POWER
GND
GTR 20 or GTR 200B VHF Com Radio
WHT
ORG
BLU
[PNL]
Pilot HS Jack
Switchcraft 12B
[PNL]
Pilot Mic Jack
Switchcraft S12B
[PNL]
Copilot HS Jack
Switchcraft 12B
[PNL]
Copilot Mic Jack
Switchcraft S12B
[PNL]
MB2011SS1W01-BC
Panel PTT
PNL
EDGE CONN
[Pilot Stick Grip]
Ray Allen G407F
Pilot PTT
TABS
[Copilot Stick Grip]
Ray Allen G405
Copilot PTT
BLK
[PNL]
Pilot LEMO
PWR
GND
RX L
RX R
MIC HI
MIC LO
PILOT HS L
PLIOT HS R
PILOT MIC
PILOT MIC LO
[PNL]
Copilot LEMO
COPILOT HS L
COPLIOT HS R
COPILOT MIC
COPILOT MIC LO
3A
20 AWG
7.5A
Potential sources of AUX audio:
PFD
MFD
GTX 45R Transponder
CO Detector
Stall warner

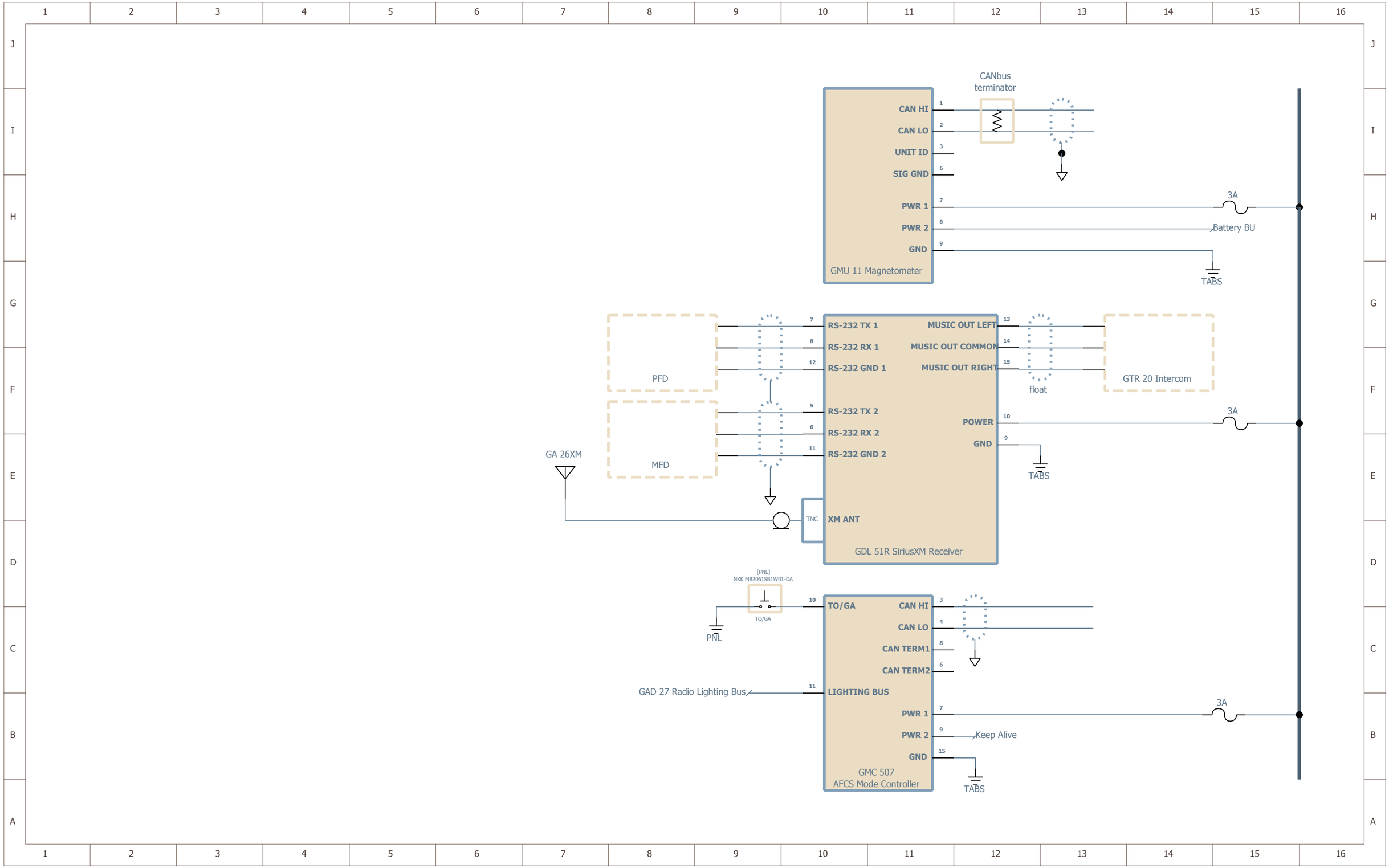
CANbus
terminator
CAN HI
CAN LO
UNIT ID
SIG GND
PWR 1
PWR 2
GND
GMU 11 Magnetometer
3A
Battery BU
TABS
RS-232 TX 1
RS-232 RX 1
RS-232 GND 1
RS-232 TX 2
RS-232 RX 2
RS-232 GND 2
XM ANT
MUSIC OUT LEFT
MUSIC OUT COMMON
MUSIC OUT RIGHT
POWER
GND
GDL 51R SiriusXM Receiver
PFD
MFD
GA 26XM
TNC
float
GTR 20 Intercom
[PNL]
NKK MB2061SB1W01-DA
TO/GA
PNL
CAN HI
CAN LO
CAN TERM1
CAN TERM2
LIGHTING BUS
PWR 1
PWR 2
GND
GMC 507
AFCS Mode Controller
GAD 27 Radio Lighting Bus
Keep Alive

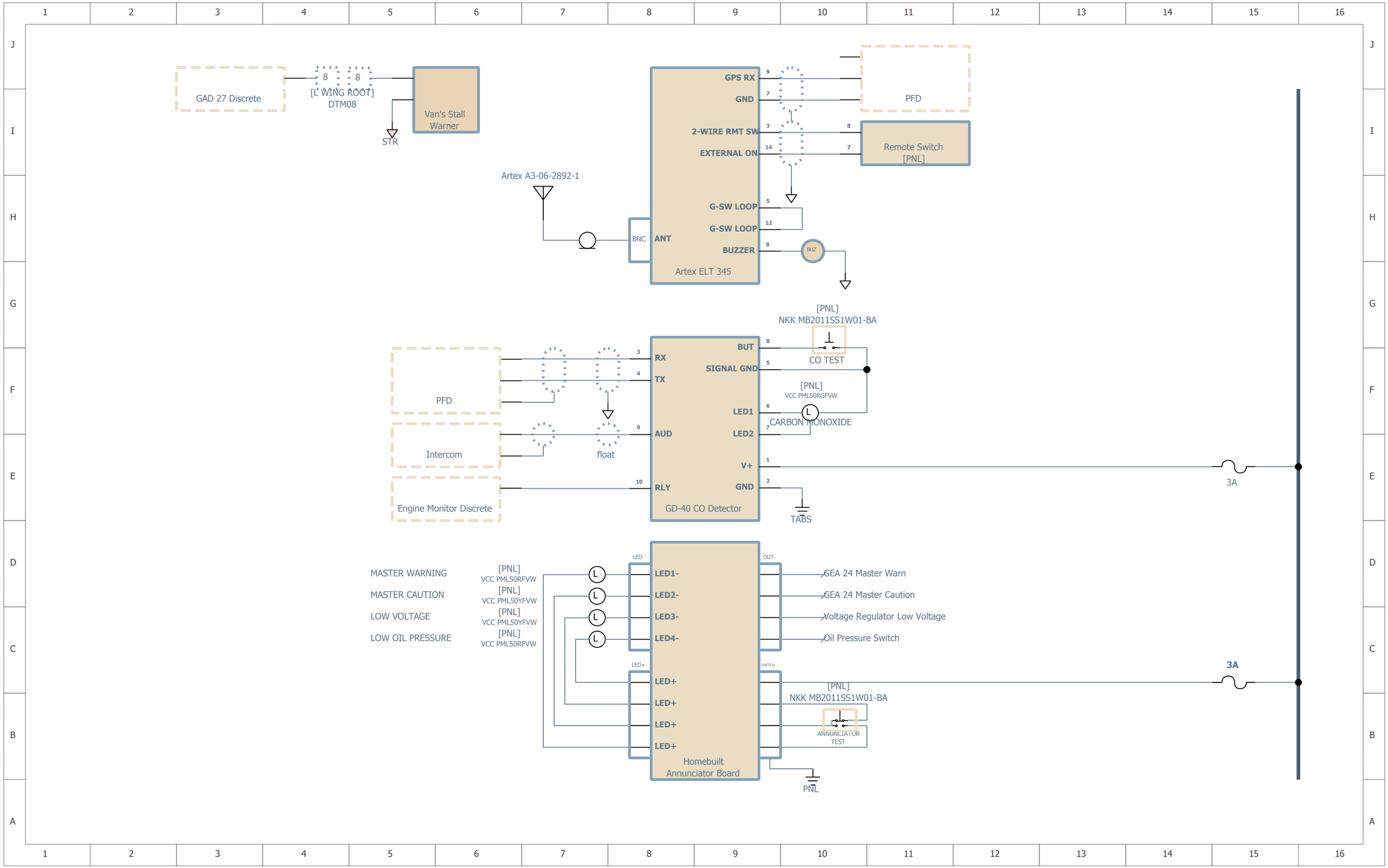
GAD 27 Discrete
8
8
[L WING ROOT]
DTM08
Van's Stall Warner
STR
GPS RX
GND
2-WIRE RMT SW
EXTERNAL ON
G-SW LOOP
G-SW LOOP
BUZZER
ANT
BNC
Artex ELT 345
BUZ
PFD
Remote Switch
[PNL]
Artex A3-06-2892-1
[PNL]
NKK MB2011SS1W01-BA
CO TEST
[PNL]
VCC PML50RGFVW
CARBON MONOXIDE
RX
TX
AUD
RLY
BUT
SIGNAL GND
LED1
LED2
V+
GND
GD-40 CO Detector
PFD
Intercom
Engine Monitor Discrete
float
3A
TABS
MASTER WARNING
MASTER CAUTION
LOW VOLTAGE
LOW OIL PRESSURE
[PNL]
VCC PML50RFVW
[PNL]
VCC PML50YFVW
[PNL]
VCC PML50YFVW
[PNL]
VCC PML50RFVW
LED-
LED1-
LED2-
LED3-
LED4-
LED+
LED+
LED+
LED+
OUT
GEA 24 Master Warn
GEA 24 Master Caution
Voltage Regulator Low Voltage
Oil Pressure Switch
SWITCH
3A
[PNL]
NKK MB2011SS1W01-BA
ANNUNCIATOR TEST
Homebuilt Annunciator Board
PNL