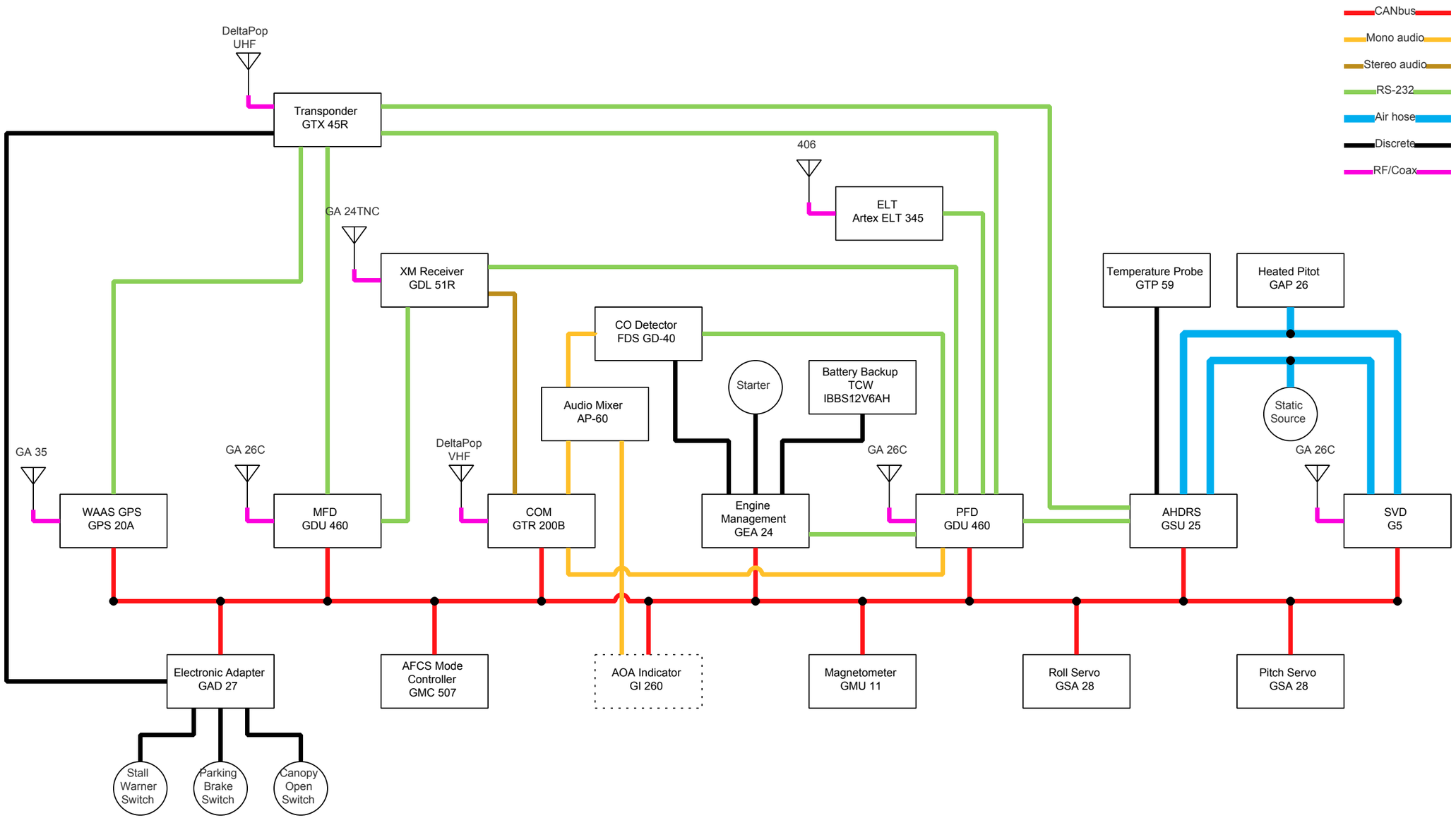


*Note: CANbus devices not in daisy chain order.*

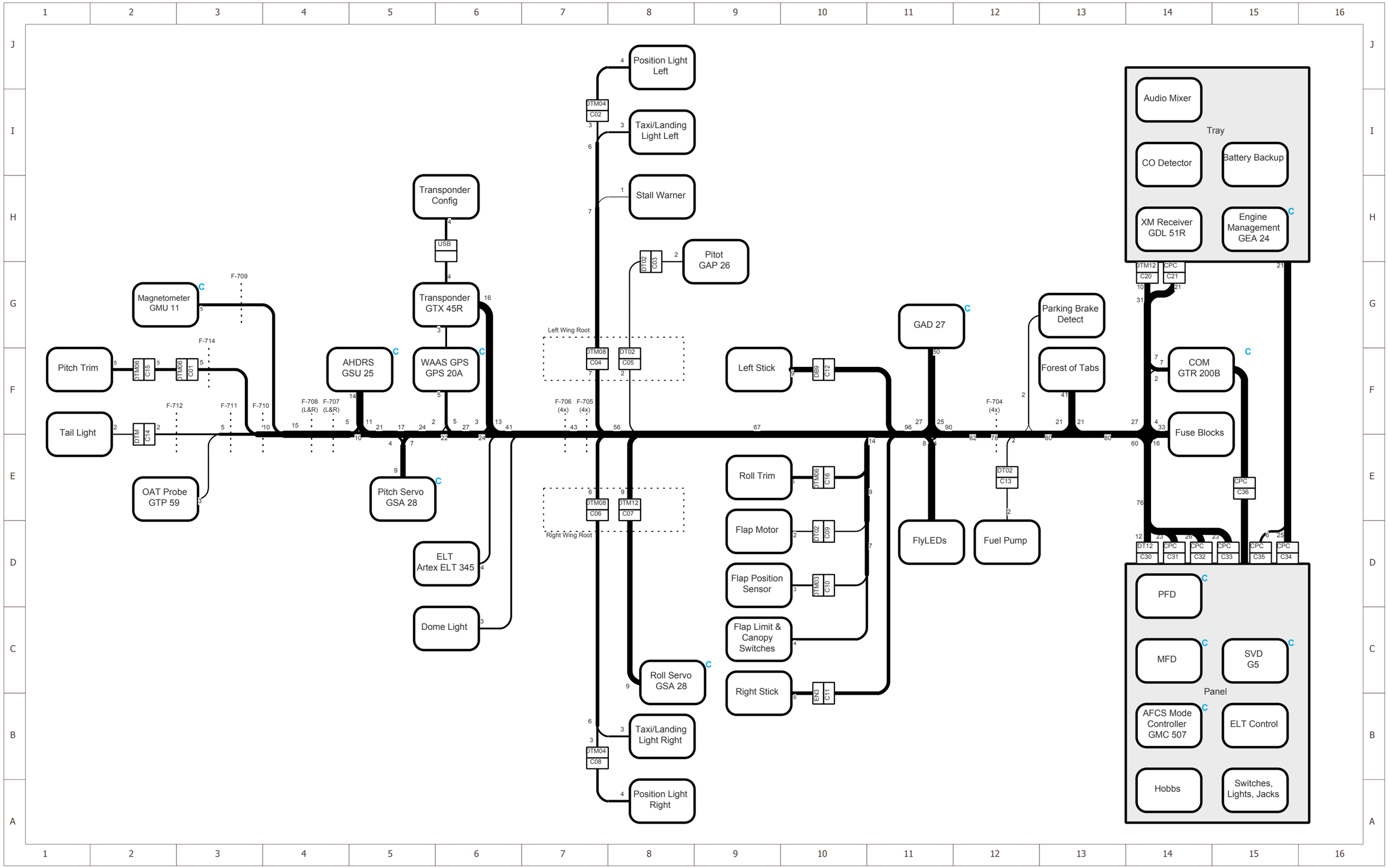
Position Light Left
Taxi/Landing Light Left
Stall Warner
Pitot GAP 26
Audio Mixer
Tray
CO Detector
Battery Backup
XM Receiver GDL 51R
Engine Management GEA 24
Transponder Config
USB
Transponder GTX 45R
Magnetometer GMU 11
Pitch Trim
Tail Light
OAT Probe GTP 59
AHDRS GSU 25
WAAS GPS GPS 20A
Pitch Servo GSA 28
ELT Artex ELT 345
Dome Light
Left Wing Root
Right Wing Root
Roll Servo GSA 28
Taxi/Landing Light Right
Position Light Right
Left Stick
Roll Trim
Flap Motor
Flap Position Sensor
Flap Limit & Canopy Switches
Right Stick
GAD 27
FlyLEDs
Parking Brake Detect
Forest of Tabs
Fuel Pump
COM GTR 200B
Fuse Blocks
PFD
MFD
SVD G5
Panel
AFCS Mode Controller GMC 507
ELT Control
Hobbs
Switches, Lights, Jacks
F-709
F-714
F-712
F-711
F-710
F-708 (L&R)
F-707 (L&R)
F-706 (4x)
F-705 (4x)
F-704 (4x)

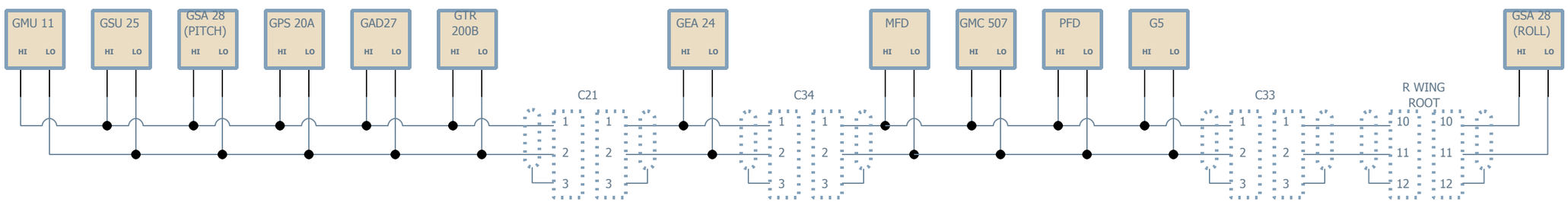
GMU 11
HI LO
GSU 25
HI LO
GSA 28 (PITCH)
HI LO
GPS 20A
HI LO
GAD27
HI LO
GTR 200B
HI LO
C21
GEA 24
HI LO
C34
MFD
HI LO
GMC 507
HI LO
PFD
HI LO
G5
HI LO
C33
R WING ROOT
GSA 28 (ROLL)
HI LO

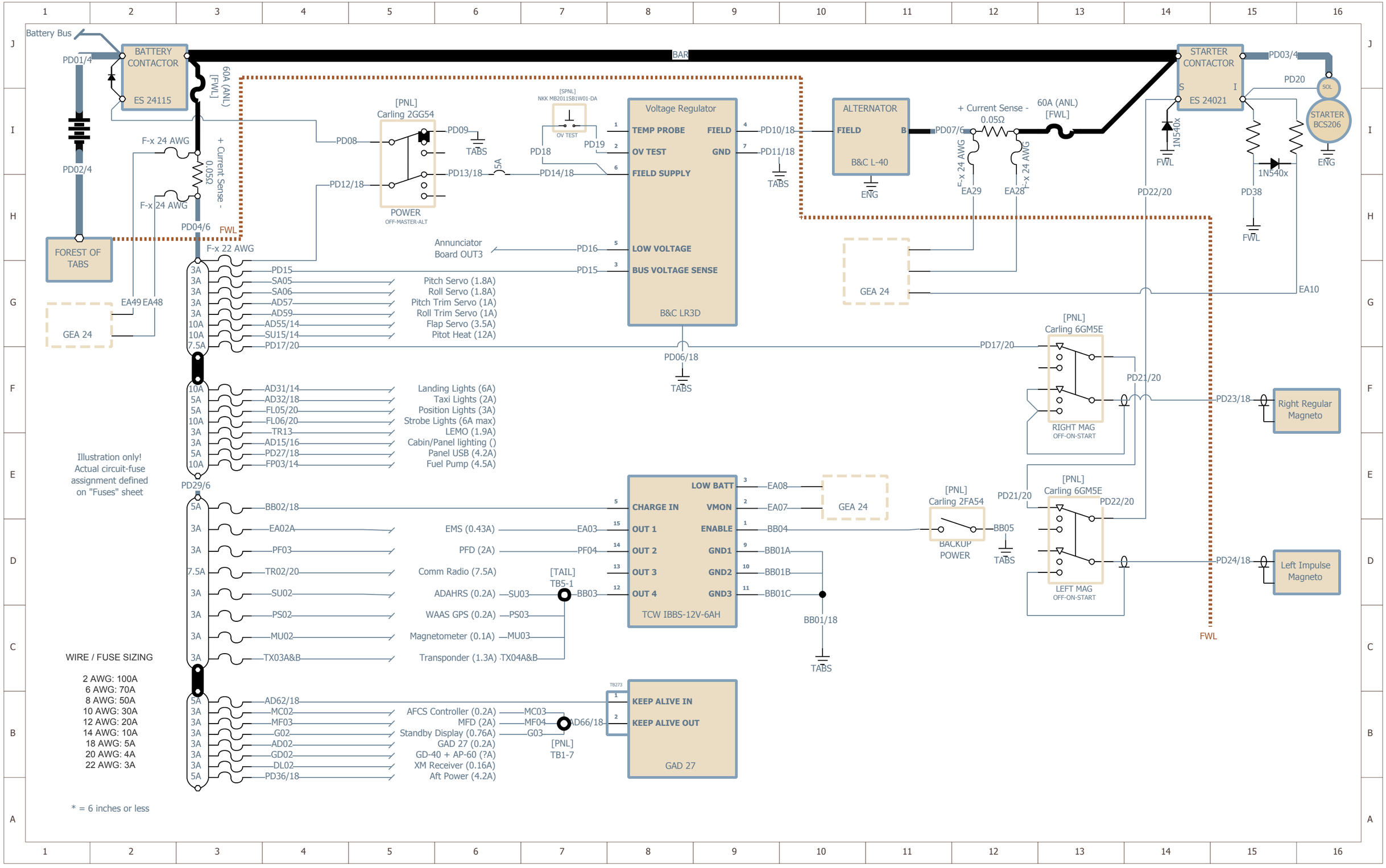
Battery Bus
BATTERY CONTACTOR
ES 24115
PD01/4
PD02/4
60A (ANL) [FWL]
F-x 24 AWG
+ Current Sense - 0.05Ω
PD04/6
FWL
F-x 22 AWG
FOREST OF TABS
GEA 24
EA49 EA48
BAR
[PNL] Carling 2GG54
POWER
OFF-MASTER-ALT
PD08
PD09
TABS
PD12/18
PD13/18
5A
[SPNL] NKK MB2011SB1W01-DA
OV TEST
PD18
PD19
PD14/18
Voltage Regulator
TEMP PROBE
OV TEST
FIELD SUPPLY
LOW VOLTAGE
BUS VOLTAGE SENSE
FIELD
GND
B&C LR3D
PD10/18
PD11/18
TABS
Annunciator Board OUT3
PD16
PD15
PD06/18
TABS
ALTERNATOR
FIELD
B
B&C L-40
ENG
PD07/6
+ Current Sense - 0.05Ω
60A (ANL) [FWL]
F-x 24 AWG
EA29
EA28
GEA 24
EA10
STARTER CONTACTOR
ES 24021
S
I
PD03/4
PD20
SOL
STARTER BCS206
ENG
1N540x
FWL
PD22/20
PD38
3A PD15
3A SA05 Pitch Servo (1.8A)
3A SA06 Roll Servo (1.8A)
3A AD57 Pitch Trim Servo (1A)
3A AD59 Roll Trim Servo (1A)
10A AD55/14 Flap Servo (3.5A)
10A SU15/14 Pitot Heat (12A)
7.5A PD17/20
PD17/20
[PNL] Carling 6GM5E
RIGHT MAG
OFF-ON-START
PD21/20
PD23/18
Right Regular Magneto
10A AD31/14 Landing Lights (6A)
5A AD32/18 Taxi Lights (2A)
5A FL05/20 Position Lights (3A)
10A FL06/20 Strobe Lights (6A max)
3A TR13 LEMO (1.9A)
3A AD15/16 Cabin/Panel lighting ()
5A PD27/18 Panel USB (4.2A)
10A FP03/14 Fuel Pump (4.5A)
Illustration only! Actual circuit-fuse assignment defined on "Fuses" sheet
PD29/6
5A BB02/18
LOW BATT
CHARGE IN
VMON
ENABLE
EA08
EA07
BB04
GEA 24
[PNL] Carling 2FA54
BACKUP POWER
BB05
TABS
PD21/20
[PNL] Carling 6GM5E
PD22/20
LEFT MAG
OFF-ON-START
PD24/18
Left Impulse Magneto
3A EA02A EMS (0.43A) EA03
3A PF03 PFD (2A) PF04
7.5A TR02/20 Comm Radio (7.5A)
3A SU02 ADAHRS (0.2A) SU03
3A PS02 WAAS GPS (0.2A) PS03
3A MU02 Magnetometer (0.1A) MU03
3A TX03A&B Transponder (1.3A) TX04A&B
[TAIL] TB5-1
BB03
OUT 1
OUT 2
OUT 3
OUT 4
GND1
GND2
GND3
BB01A
BB01B
BB01C
TCW IBBS-12V-6AH
BB01/18
TABS
FWL
WIRE / FUSE SIZING
2 AWG: 100A
6 AWG: 70A
8 AWG: 50A
10 AWG: 30A
12 AWG: 20A
14 AWG: 10A
18 AWG: 5A
20 AWG: 4A
22 AWG: 3A
5A AD62/18
3A MC02 AFCS Controller (0.2A) MC03
3A MF03 MFD (2A) MF04
3A G02 Standby Display (0.76A) G03
3A AD02 GAD 27 (0.2A)
3A GD02 GD-40 + AP-60 (?A)
3A DL02 XM Receiver (0.16A)
5A PD36/18 Aft Power (4.2A)
AD66/18
[PNL] TB1-7
KEEP ALIVE IN
KEEP ALIVE OUT
GAD 27
* = 6 inches or less

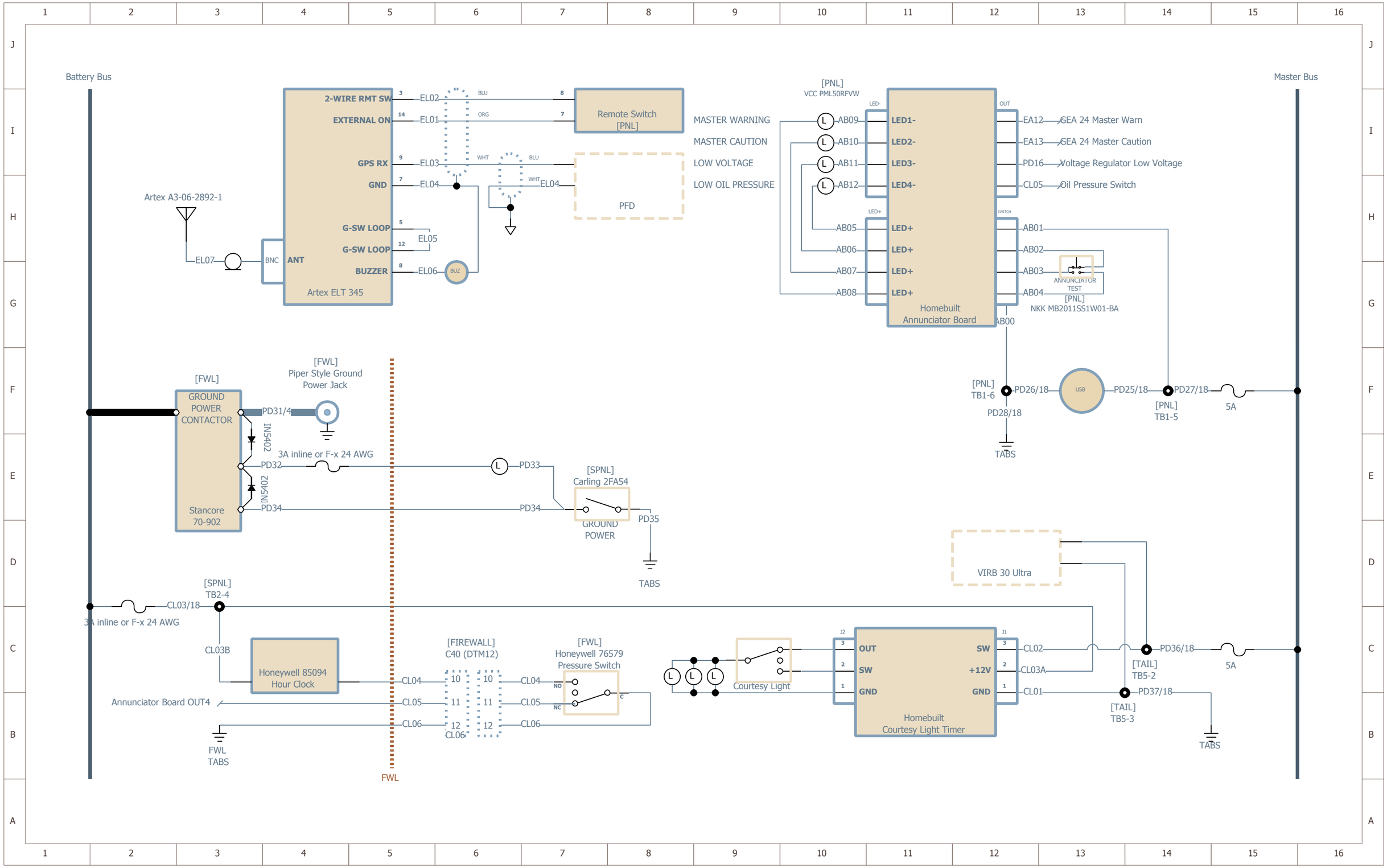
Battery Bus
Master Bus
Artex A3-06-2892-1
EL07
BNC
ANT
Artex ELT 345
2-WIRE RMT SW
EXTERNAL ON
GPS RX
GND
G-SW LOOP
G-SW LOOP
BUZZER
EL02
EL01
EL03
EL04
EL05
EL06
BUZ
BLU
ORG
WHT
Remote Switch
[PNL]
PFD
[PNL]
VCC PML50RFVW
MASTER WARNING
MASTER CAUTION
LOW VOLTAGE
LOW OIL PRESSURE
AB09
AB10
AB11
AB12
AB05
AB06
AB07
AB08
LED1-
LED2-
LED3-
LED4-
LED+
Homebuilt
Annunciator Board
EA12
EA13
PD16
CL05
GEA 24 Master Warn
GEA 24 Master Caution
Voltage Regulator Low Voltage
Oil Pressure Switch
AB01
AB02
AB03
AB04
ANNUNCIATOR TEST
[PNL]
NKK MB2011SS1W01-BA
AB00
[PNL]
TB1-6
PD26/18
PD28/18
TABS
USB
PD25/18
PD27/18
[PNL]
TB1-5
5A
[FWL]
Piper Style Ground
Power Jack
[FWL]
GROUND
POWER
CONTACTOR
PD31/4
1N5402
3A inline or F-x 24 AWG
PD32
PD33
PD34
Stancore
70-902
[SPNL]
Carling 2FA54
GROUND
POWER
PD35
TABS
VIRB 30 Ultra
[SPNL]
TB2-4
CL03/18
3A inline or F-x 24 AWG
CL03B
Honeywell 85094
Hour Clock
Annunciator Board OUT4
FWL
TABS
[FIREWALL]
C40 (DTM12)
CL04
CL05
CL06
[FWL]
Honeywell 76579
Pressure Switch
NO
NC
C
Courtesy Light
OUT
SW
GND
+12V
Homebuilt
Courtesy Light Timer
CL02
CL03A
CL01
PD36/18
[TAIL]
TB5-2
5A
PD37/18
[TAIL]
TB5-3
TABS
FWL

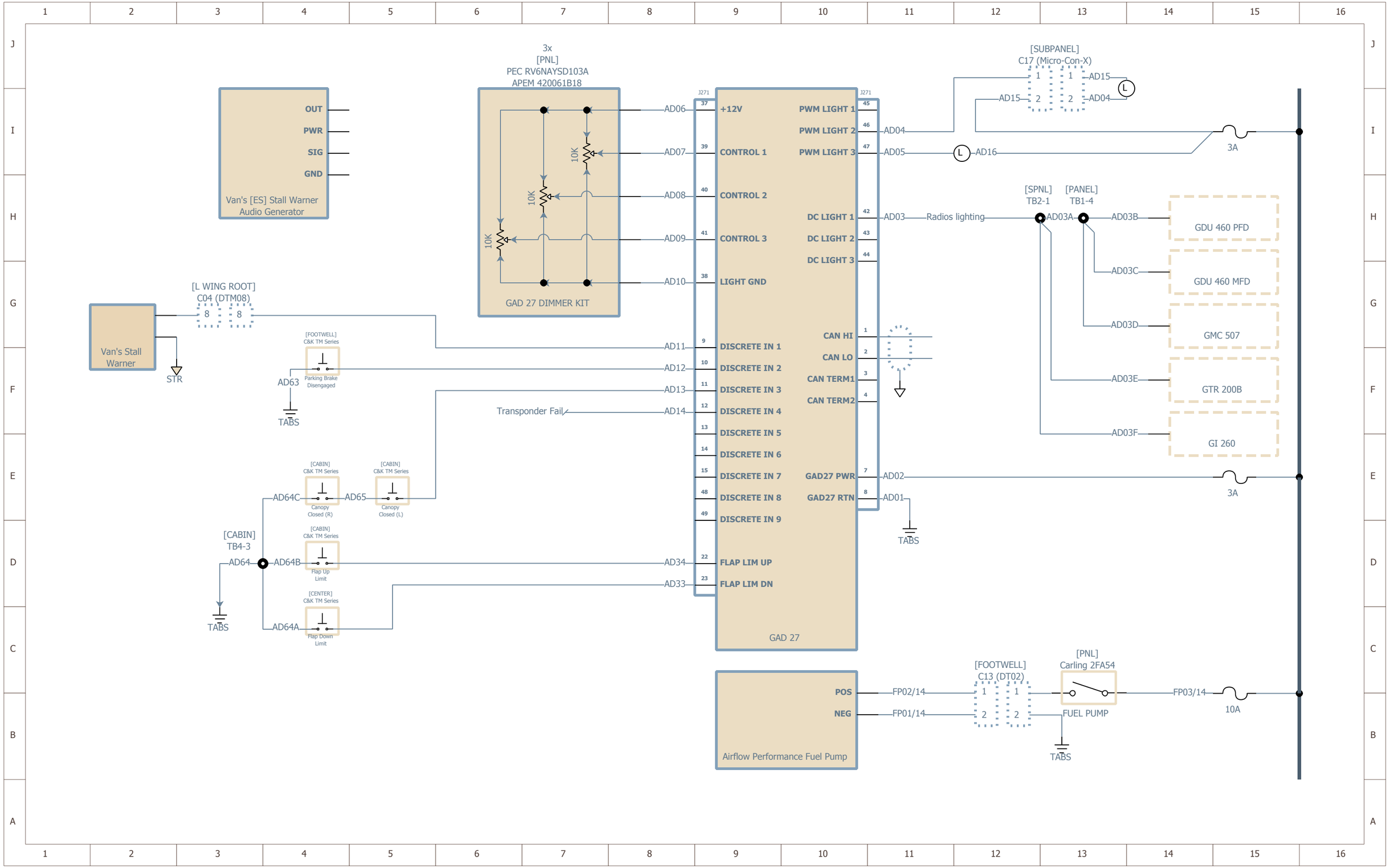
Van's [ES] Stall Warner Audio Generator
OUT
PWR
SIG
GND
3x
[PNL]
PEC RV6NAYSD103A
APEM 420061B18
10K
10K
10K
GAD 27 DIMMER KIT
AD06
AD07
AD08
AD09
AD10
J271
+12V
CONTROL 1
CONTROL 2
CONTROL 3
LIGHT GND
PWM LIGHT 1
PWM LIGHT 2
PWM LIGHT 3
DC LIGHT 1
DC LIGHT 2
DC LIGHT 3
CAN HI
CAN LO
CAN TERM1
CAN TERM2
GAD27 PWR
GAD27 RTN
DISCRETE IN 1
DISCRETE IN 2
DISCRETE IN 3
DISCRETE IN 4
DISCRETE IN 5
DISCRETE IN 6
DISCRETE IN 7
DISCRETE IN 8
DISCRETE IN 9
FLAP LIM UP
FLAP LIM DN
GAD 27
[SUBPANEL]
C17 (Micro-Con-X)
AD15
AD04
AD05
AD16
3A
[SPNL]
TB2-1
[PANEL]
TB1-4
AD03
Radios lighting
AD03A
AD03B
AD03C
AD03D
AD03E
AD03F
GDU 460 PFD
GDU 460 MFD
GMC 507
GTR 200B
GI 260
AD02
AD01
TABS
[L WING ROOT]
C04 (DTM08)
Van's Stall Warner
STR
[FOOTWELL]
C&K TM Series
Parking Brake Disengaged
AD63
TABS
AD11
AD12
AD13
AD14
Transponder Fail
[CABIN]
C&K TM Series
Canopy Closed (R)
Canopy Closed (L)
AD64C
AD65
[CABIN]
TB4-3
AD64
AD64B
AD64A
Flap Up Limit
Flap Down Limit
[CENTER]
AD34
AD33
[FOOTWELL]
C13 (DT02)
[PNL]
Carling 2FA54
FUEL PUMP
FP02/14
FP01/14
FP03/14
10A
POS
NEG
Airflow Performance Fuel Pump

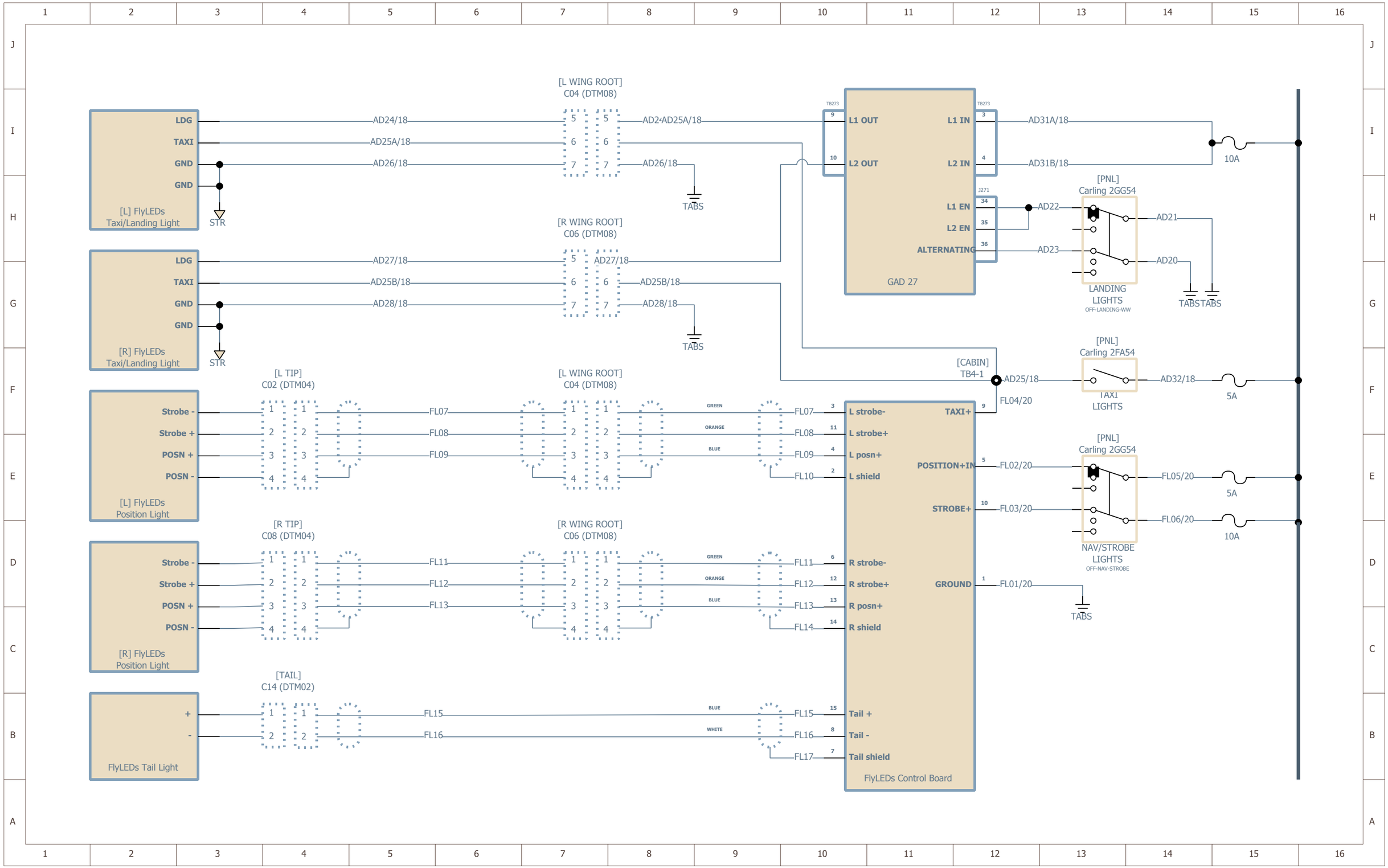
[L] FlyLEDs
Taxi/Landing Light
LDG
TAXI
GND
GND
STR
[R] FlyLEDs
Taxi/Landing Light
[L] FlyLEDs
Position Light
[R] FlyLEDs
Position Light
FlyLEDs Tail Light
Strobe -
Strobe +
POSN +
POSN -
[L WING ROOT]
C04 (DTM08)
[R WING ROOT]
C06 (DTM08)
[L TIP]
C02 (DTM04)
[R TIP]
C08 (DTM04)
[TAIL]
C14 (DTM02)
AD24/18
AD25A/18
AD26/18
AD27/18
AD25B/18
AD28/18
AD2-AD25A/18
TABS
GAD 27
L1 OUT
L2 OUT
L1 IN
L2 IN
L1 EN
L2 EN
ALTERNATING
AD31A/18
AD31B/18
10A
[PNL]
Carling 2GG54
AD22
AD23
AD21
AD20
LANDING
LIGHTS
OFF-LANDING-WW
[CABIN]
TB4-1
AD25/18
FL04/20
[PNL]
Carling 2FA54
AD32/18
5A
TAXI
LIGHTS
FL07
FL08
FL09
FL10
FL11
FL12
FL13
FL14
FL15
FL16
FL17
GREEN
ORANGE
BLUE
WHITE
L strobe-
L strobe+
L posn+
L shield
R strobe-
R strobe+
R posn+
R shield
Tail +
Tail -
Tail shield
TAXI+
POSITION+IN
STROBE+
GROUND
FL02/20
FL03/20
FL01/20
[PNL]
Carling 2GG54
FL05/20
FL06/20
5A
10A
NAV/STROBE
LIGHTS
OFF-NAV-STROBE
FlyLEDs Control Board

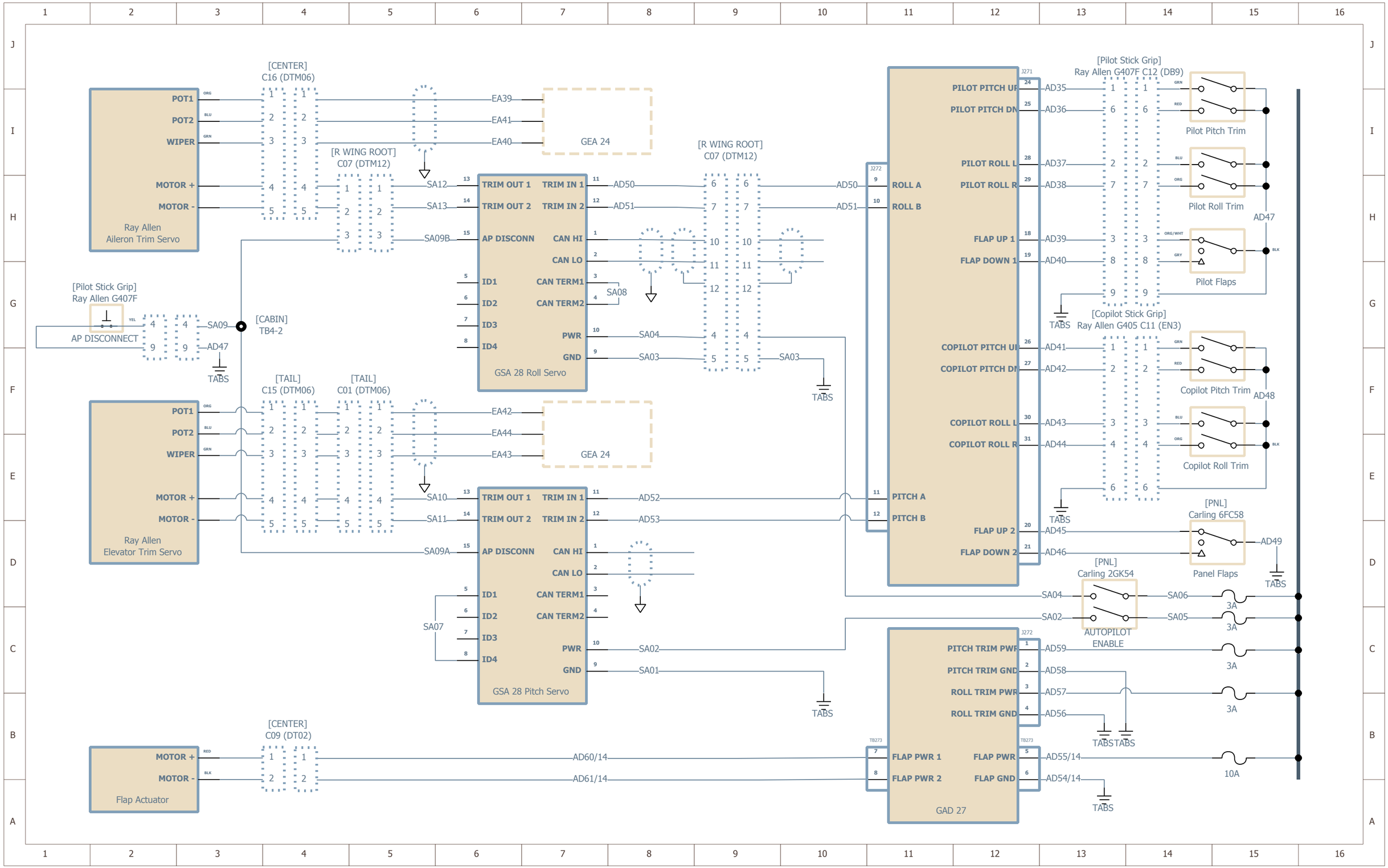
Ray Allen
Aileron Trim Servo
POT1
POT2
WIPER
MOTOR +
MOTOR -
[CENTER]
C16 (DTM06)
[R WING ROOT]
C07 (DTM12)
GEA 24
EA39
EA41
EA40
SA12
SA13
SA09B
TRIM OUT 1
TRIM OUT 2
AP DISCONN
ID1
ID2
ID3
ID4
TRIM IN 1
TRIM IN 2
CAN HI
CAN LO
CAN TERM1
CAN TERM2
PWR
GND
GSA 28 Roll Servo
AD50
AD51
SA08
SA04
SA03
[Pilot Stick Grip]
Ray Allen G407F
AP DISCONNECT
SA09
AD47
TABS
[CABIN]
TB4-2
Ray Allen
Elevator Trim Servo
[TAIL]
C15 (DTM06)
[TAIL]
C01 (DTM06)
EA42
EA44
EA43
SA10
SA11
SA09A
AD52
AD53
SA07
SA02
SA01
GSA 28 Pitch Servo
[CENTER]
C09 (DT02)
Flap Actuator
AD60/14
AD61/14
J271
J272
PILOT PITCH UP
PILOT PITCH DN
PILOT ROLL L
PILOT ROLL R
FLAP UP 1
FLAP DOWN 1
COPILOT PITCH UP
COPILOT PITCH DN
COPILOT ROLL L
COPILOT ROLL R
FLAP UP 2
FLAP DOWN 2
ROLL A
ROLL B
PITCH A
PITCH B
AD35
AD36
AD37
AD38
AD39
AD40
AD41
AD42
AD43
AD44
AD45
AD46
[Pilot Stick Grip]
Ray Allen G407F C12 (DB9)
Pilot Pitch Trim
Pilot Roll Trim
Pilot Flaps
[Copilot Stick Grip]
Ray Allen G405 C11 (EN3)
Copilot Pitch Trim
Copilot Roll Trim
AD48
[PNL]
Carling 6FC58
Panel Flaps
AD49
[PNL]
Carling 2GK54
AUTOPILOT
ENABLE
SA06
SA05
3A
PITCH TRIM PWR
PITCH TRIM GND
ROLL TRIM PWR
ROLL TRIM GND
AD59
AD58
AD57
AD56
TB273
FLAP PWR 1
FLAP PWR 2
FLAP PWR
FLAP GND
AD55/14
AD54/14
10A
GAD 27

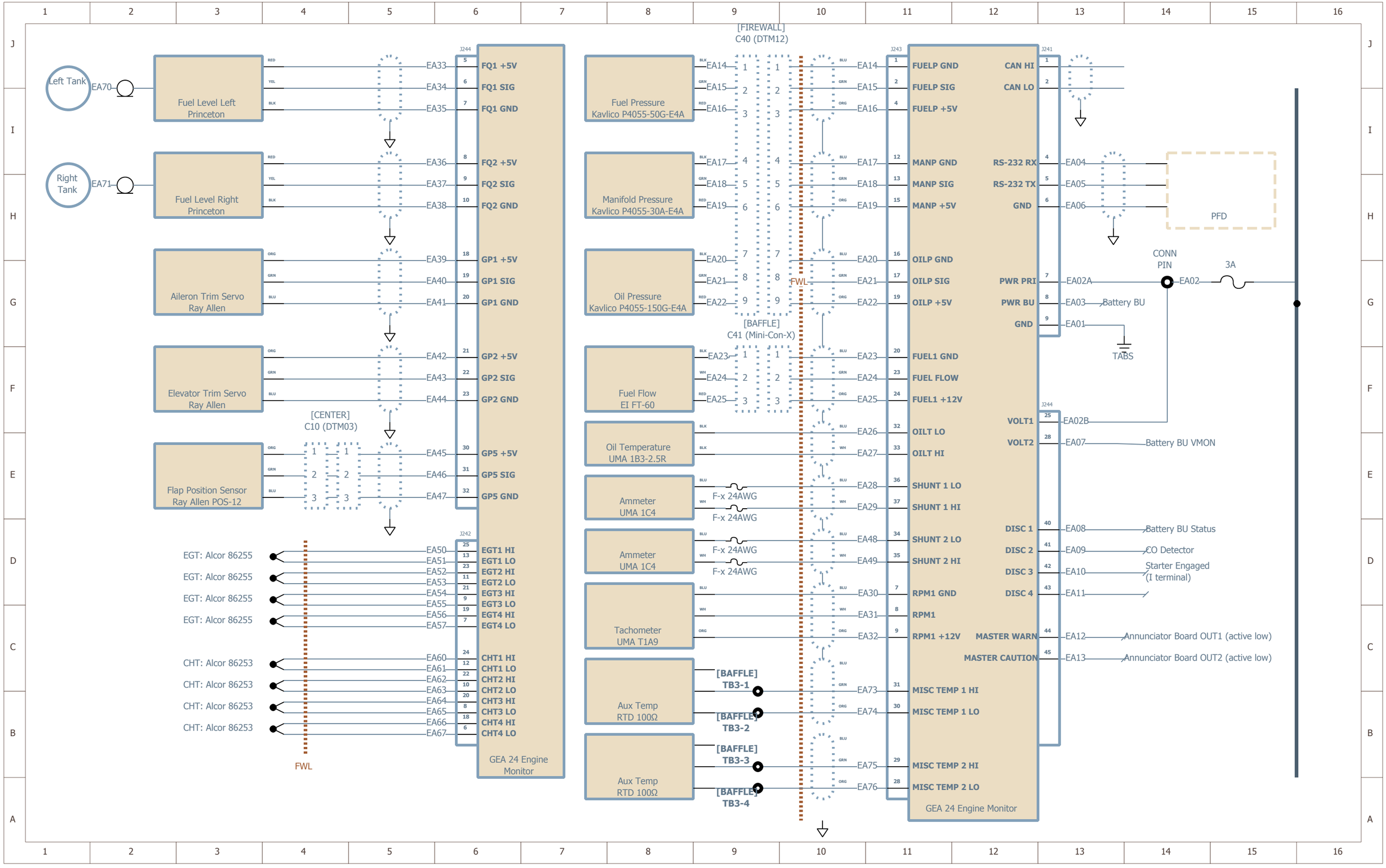
Left Tank
EA70
Right Tank
EA71
Fuel Level Left Princeton
Fuel Level Right Princeton
Aileron Trim Servo Ray Allen
Elevator Trim Servo Ray Allen
Flap Position Sensor Ray Allen POS-12
[CENTER] C10 (DTM03)
J244
EA33 FQ1 +5V
EA34 FQ1 SIG
EA35 FQ1 GND
EA36 FQ2 +5V
EA37 FQ2 SIG
EA38 FQ2 GND
EA39 GP1 +5V
EA40 GP1 SIG
EA41 GP1 GND
EA42 GP2 +5V
EA43 GP2 SIG
EA44 GP2 GND
EA45 GP5 +5V
EA46 GP5 SIG
EA47 GP5 GND
J242
EGT: Alcor 86255
EA50 EGT1 HI
EA51 EGT1 LO
EA52 EGT2 HI
EA53 EGT2 LO
EA54 EGT3 HI
EA55 EGT3 LO
EA56 EGT4 HI
EA57 EGT4 LO
CHT: Alcor 86253
EA60 CHT1 HI
EA61 CHT1 LO
EA62 CHT2 HI
EA63 CHT2 LO
EA64 CHT3 HI
EA65 CHT3 LO
EA66 CHT4 HI
EA67 CHT4 LO
FWL
GEA 24 Engine Monitor
[FIREWALL] C40 (DTM12)
Fuel Pressure Kavlico P4055-50G-E4A
Manifold Pressure Kavlico P4055-30A-E4A
Oil Pressure Kavlico P4055-150G-E4A
[BAFFLE] C41 (Mini-Con-X)
Fuel Flow EI FT-60
Oil Temperature UMA 1B3-2.5R
Ammeter UMA 1C4
Ammeter UMA 1C4
Tachometer UMA T1A9
Aux Temp RTD 100Ω
Aux Temp RTD 100Ω
F-x 24AWG
[BAFFLE] TB3-1
[BAFFLE] TB3-2
[BAFFLE] TB3-3
[BAFFLE] TB3-4
J243
EA14 FUELP GND
EA15 FUELP SIG
EA16 FUELP +5V
EA17 MANP GND
EA18 MANP SIG
EA19 MANP +5V
EA20 OILP GND
EA21 OILP SIG
EA22 OILP +5V
EA23 FUEL1 GND
EA24 FUEL FLOW
EA25 FUEL1 +12V
EA26 OILT LO
EA27 OILT HI
EA28 SHUNT 1 LO
EA29 SHUNT 1 HI
EA48 SHUNT 2 LO
EA49 SHUNT 2 HI
EA30 RPM1 GND
EA31 RPM1
EA32 RPM1 +12V
EA73 MISC TEMP 1 HI
EA74 MISC TEMP 1 LO
EA75 MISC TEMP 2 HI
EA76 MISC TEMP 2 LO
GEA 24 Engine Monitor
J241
CAN HI
CAN LO
RS-232 RX EA04
RS-232 TX EA05
GND EA06
PFD
PWR PRI EA02A
PWR BU EA03 Battery BU
GND EA01
TABS
CONN PIN
EA02
3A
J244
VOLT1 EA02B
VOLT2 EA07 Battery BU VMON
DISC 1 EA08 Battery BU Status
DISC 2 EA09 CO Detector
DISC 3 EA10 Starter Engaged (I terminal)
DISC 4 EA11
MASTER WARN EA12 Annunciator Board OUT1 (active low)
MASTER CAUTION EA13 Annunciator Board OUT2 (active low)

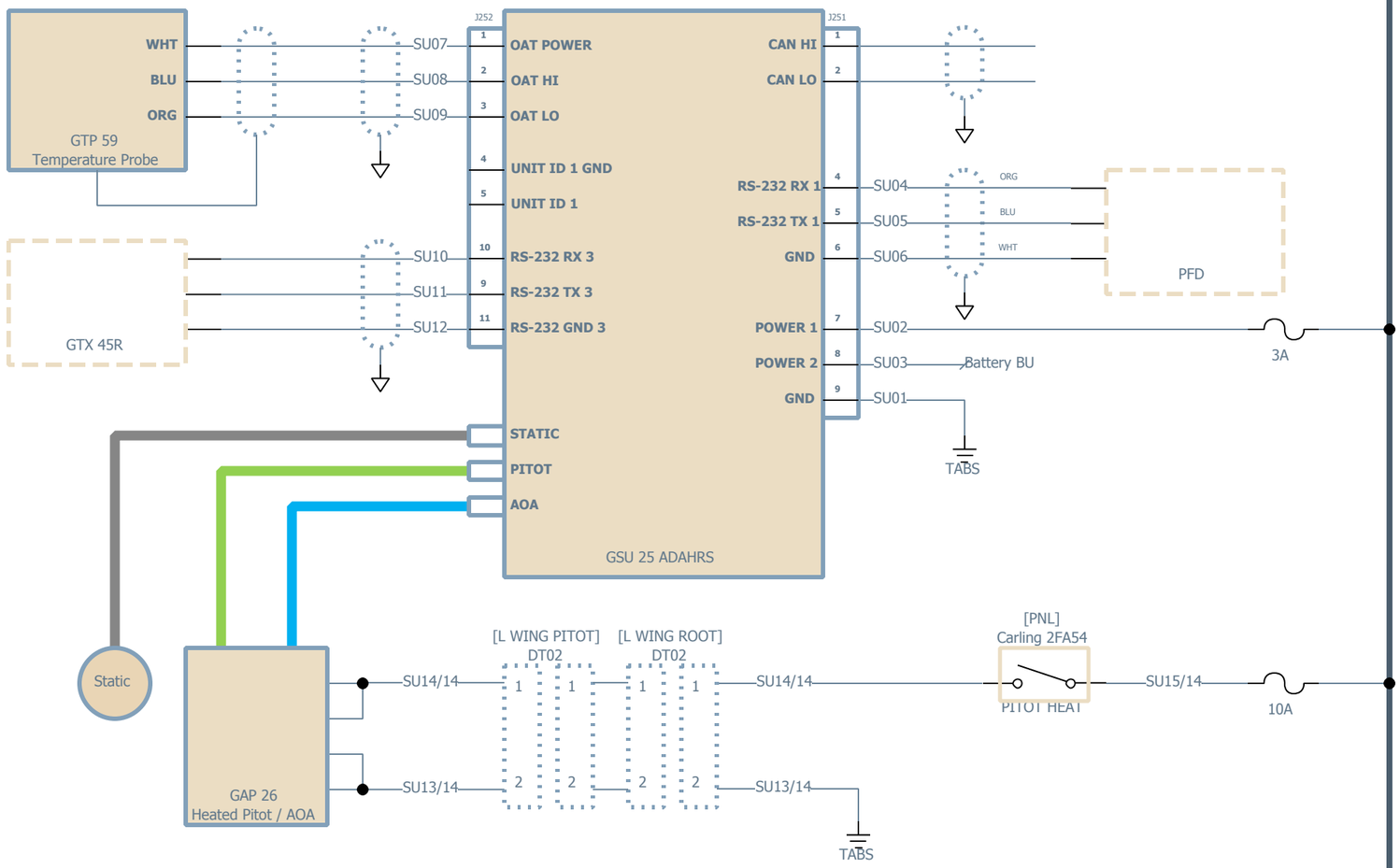
GTP 59
Temperature Probe
WHT
BLU
ORG
SU07
SU08
SU09
J252
OAT POWER
OAT HI
OAT LO
UNIT ID 1 GND
UNIT ID 1
RS-232 RX 3
RS-232 TX 3
RS-232 GND 3
GTX 45R
SU10
SU11
SU12
STATIC
PITOT
AOA
GSU 25 ADAHRS
J251
CAN HI
CAN LO
RS-232 RX 1
RS-232 TX 1
GND
POWER 1
POWER 2
GND
SU04
SU05
SU06
SU02
SU03
SU01
ORG
BLU
WHT
PFD
3A
Battery BU
TABS
Static
GAP 26
Heated Pitot / AOA
SU14/14
SU13/14
[L WING PITOT]
DT02
[L WING ROOT]
DT02
[PNL]
Carling 2FA54
PITOT HEAT
SU15/14
10A

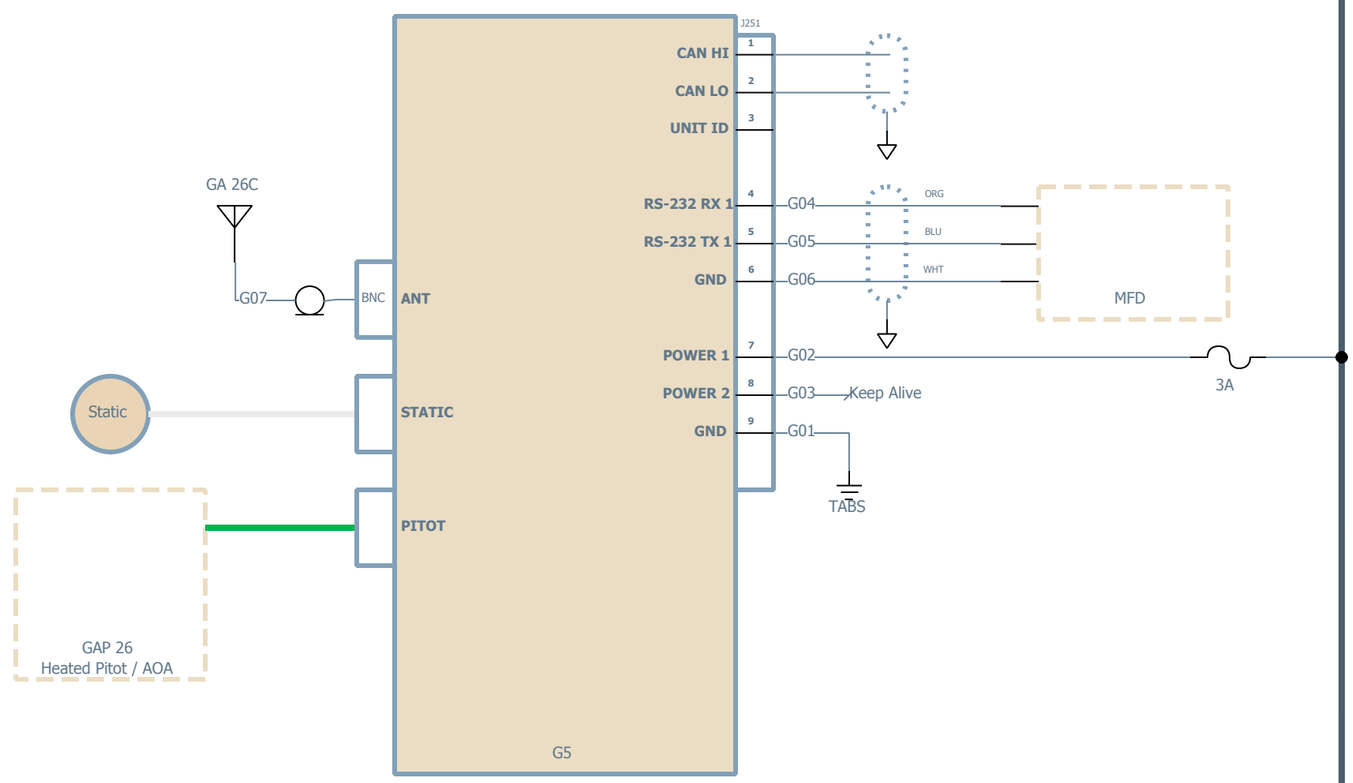
J251
CAN HI
CAN LO
UNIT ID
RS-232 RX 1
RS-232 TX 1
GND
POWER 1
POWER 2
GND
ANT
STATIC
PITOT
G5
GA 26C
G07
BNC
Static
GAP 26
Heated Pitot / AOA
G04
G05
G06
G02
G03
G01
ORG
BLU
WHT
MFD
Keep Alive
3A
TABS

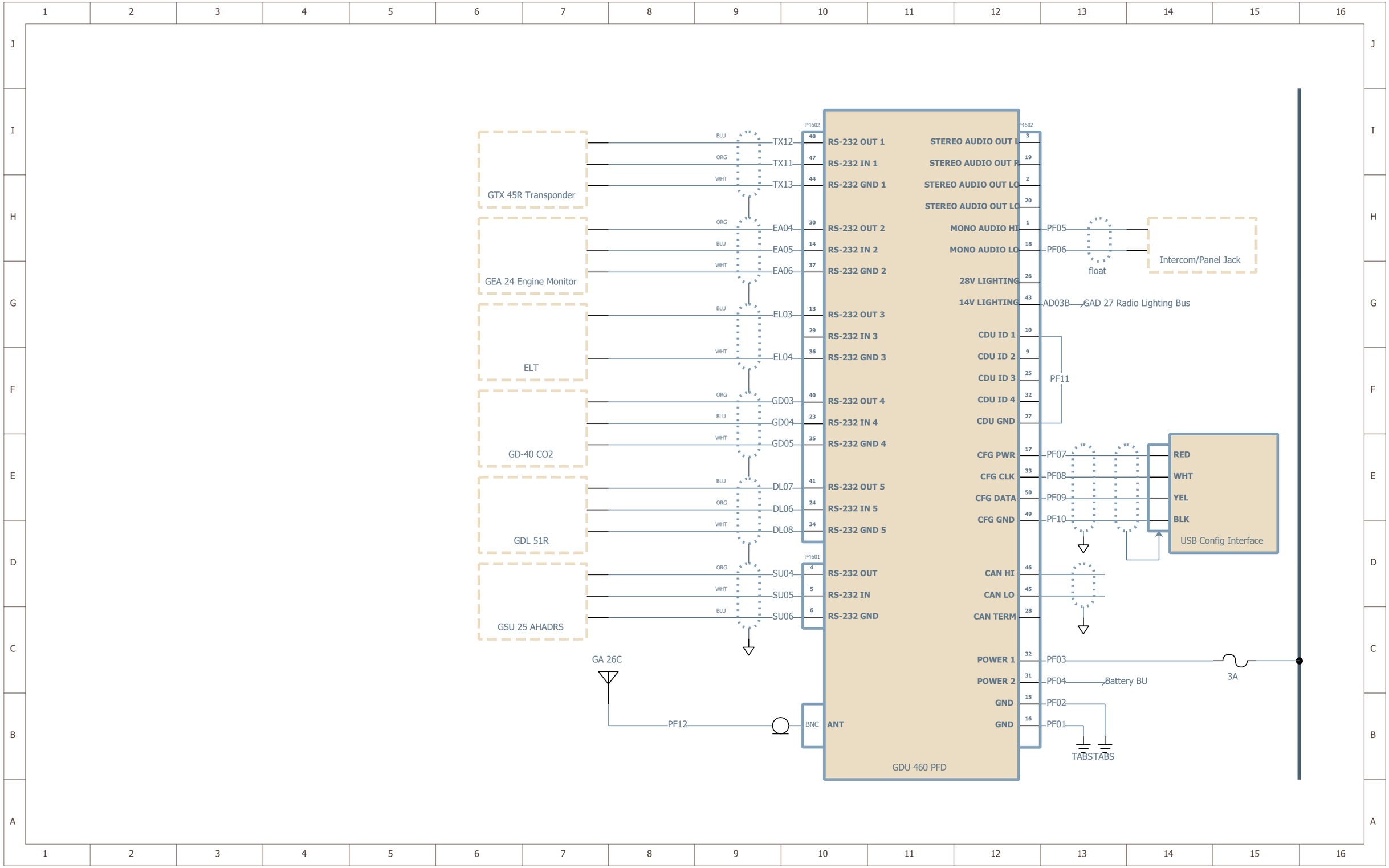
GTX 45R Transponder
GEA 24 Engine Monitor
ELT
GD-40 CO2
GDL 51R
GSU 25 AHADRS
GA 26C
PF12
BNC
ANT
P4602
P4601
TX12
TX11
TX13
EA04
EA05
EA06
EL03
EL04
GD03
GD04
GD05
DL07
DL06
DL08
SU04
SU05
SU06
BLU
ORG
WHT
RS-232 OUT 1
RS-232 IN 1
RS-232 GND 1
RS-232 OUT 2
RS-232 IN 2
RS-232 GND 2
RS-232 OUT 3
RS-232 IN 3
RS-232 GND 3
RS-232 OUT 4
RS-232 IN 4
RS-232 GND 4
RS-232 OUT 5
RS-232 IN 5
RS-232 GND 5
RS-232 OUT
RS-232 IN
RS-232 GND
STEREO AUDIO OUT L
STEREO AUDIO OUT R
STEREO AUDIO OUT LO
STEREO AUDIO OUT LO
MONO AUDIO HI
MONO AUDIO LO
28V LIGHTING
14V LIGHTING
CDU ID 1
CDU ID 2
CDU ID 3
CDU ID 4
CDU GND
CFG PWR
CFG CLK
CFG DATA
CFG GND
CAN HI
CAN LO
CAN TERM
POWER 1
POWER 2
GND
GND
PF05
PF06
float
Intercom/Panel Jack
AD03B
GAD 27 Radio Lighting Bus
PF11
PF07
PF08
PF09
PF10
RED
WHT
YEL
BLK
USB Config Interface
PF03
3A
PF04
Battery BU
PF02
PF01
TABS
TABS
GDU 460 PFD

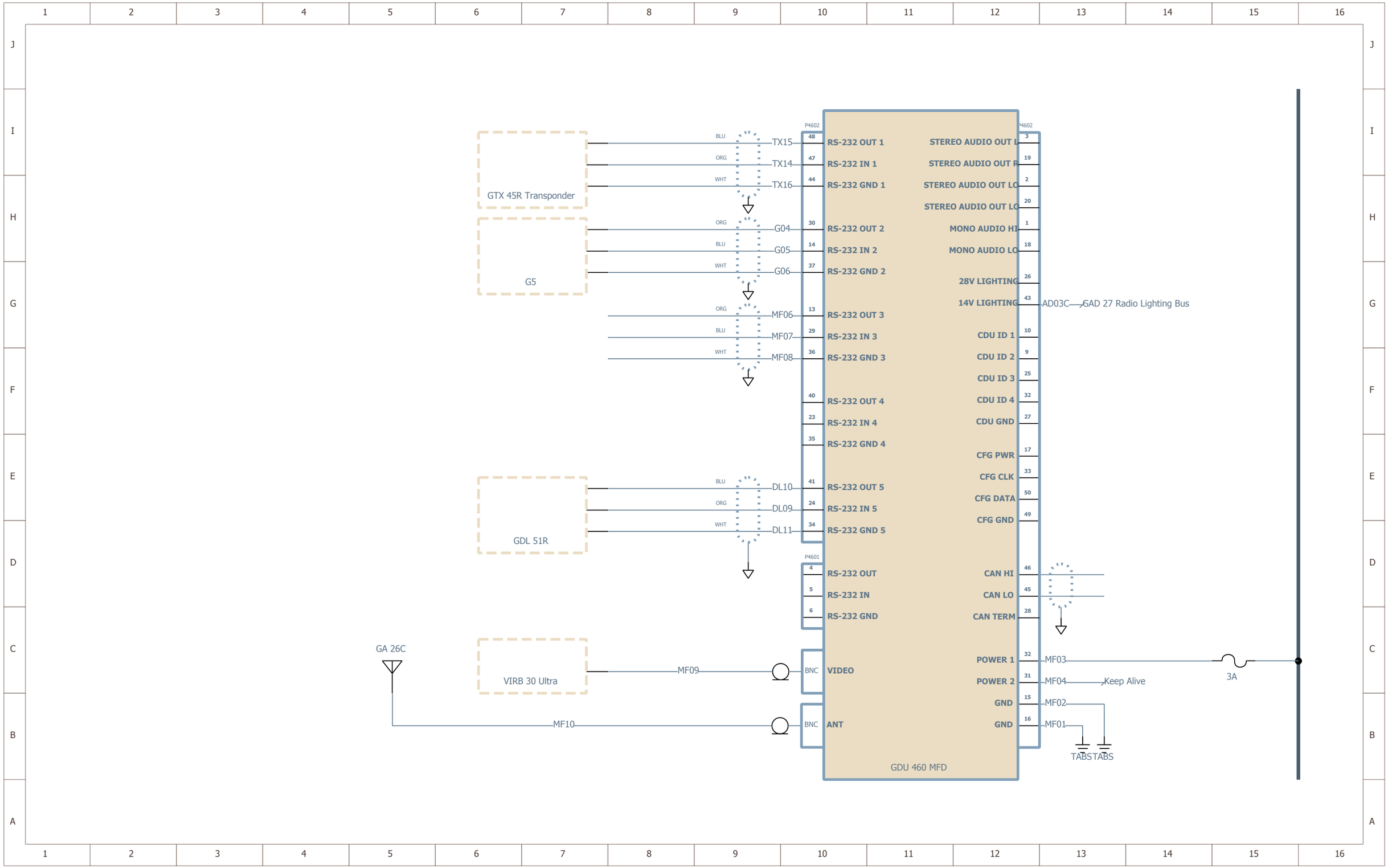
GTX 45R Transponder
G5
GDL 51R
VIRB 30 Ultra
GA 26C
BLU
ORG
WHT
TX15
TX14
TX16
G04
G05
G06
MF06
MF07
MF08
DL10
DL09
DL11
MF09
MF10
P4602
P4601
RS-232 OUT 1
RS-232 IN 1
RS-232 GND 1
RS-232 OUT 2
RS-232 IN 2
RS-232 GND 2
RS-232 OUT 3
RS-232 IN 3
RS-232 GND 3
RS-232 OUT 4
RS-232 IN 4
RS-232 GND 4
RS-232 OUT 5
RS-232 IN 5
RS-232 GND 5
RS-232 OUT
RS-232 IN
RS-232 GND
BNC
VIDEO
ANT
STEREO AUDIO OUT L
STEREO AUDIO OUT R
STEREO AUDIO OUT LO
STEREO AUDIO OUT LO
MONO AUDIO HI
MONO AUDIO LO
28V LIGHTING
14V LIGHTING
CDU ID 1
CDU ID 2
CDU ID 3
CDU ID 4
CDU GND
CFG PWR
CFG CLK
CFG DATA
CFG GND
CAN HI
CAN LO
CAN TERM
POWER 1
POWER 2
GND
GND
AD03C
GAD 27 Radio Lighting Bus
MF03
MF04
MF02
MF01
Keep Alive
3A
TABS
TABS
GDU 460 MFD

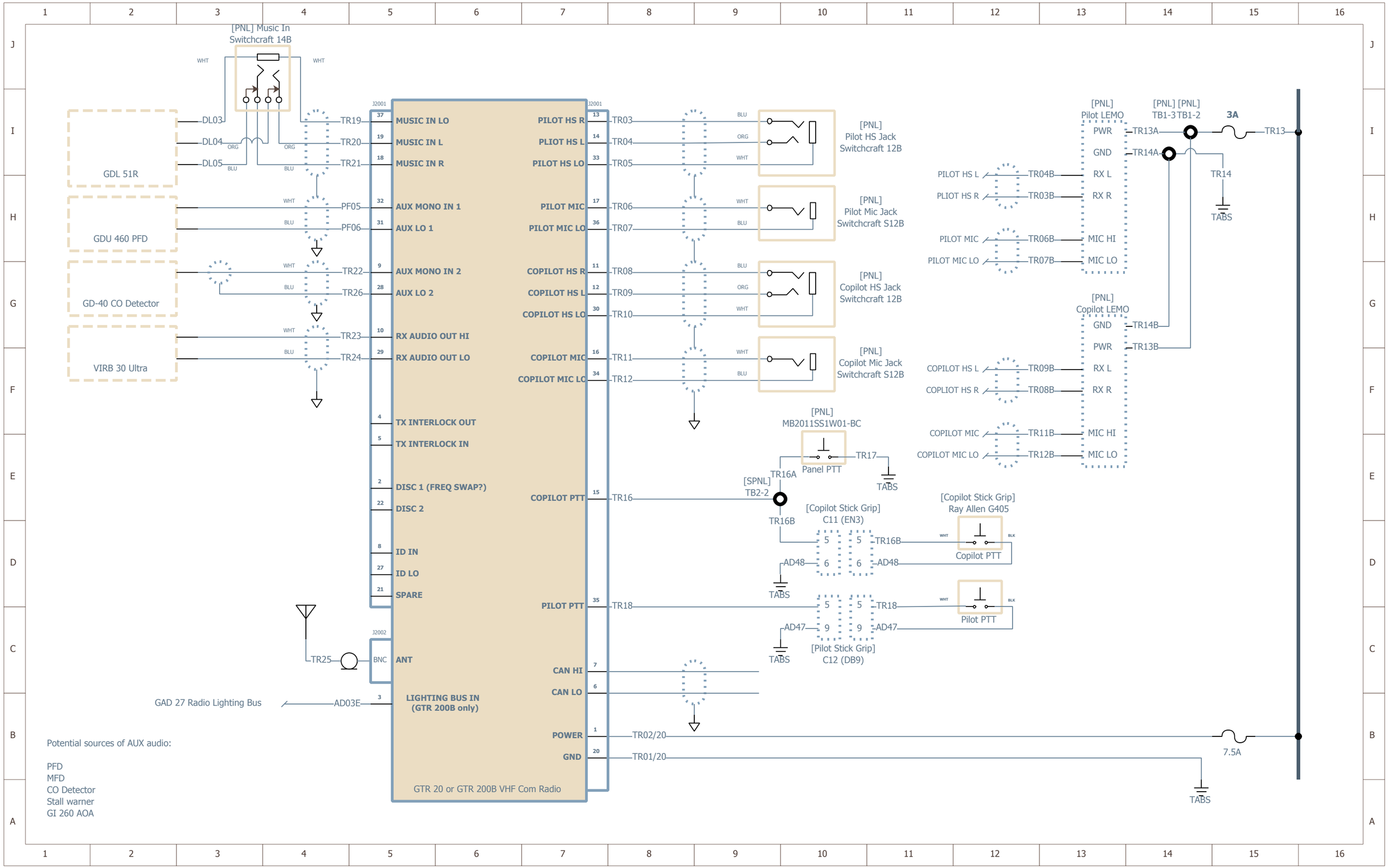
[PNL] Music In Switchcraft 14B
WHT
WHT
GDL 51R
DL03
DL04
DL05
ORG
ORG
BLU
BLU
GDU 460 PFD
WHT
BLU
PF05
PF06
GD-40 CO Detector
WHT
BLU
TR22
TR26
VIRB 30 Ultra
WHT
BLU
TR23
TR24
TR19
TR20
TR21
J2001
37 MUSIC IN LO
19 MUSIC IN L
18 MUSIC IN R
32 AUX MONO IN 1
31 AUX LO 1
9 AUX MONO IN 2
28 AUX LO 2
10 RX AUDIO OUT HI
29 RX AUDIO OUT LO
4 TX INTERLOCK OUT
5 TX INTERLOCK IN
2 DISC 1 (FREQ SWAP?)
22 DISC 2
8 ID IN
27 ID LO
21 SPARE
J2002
BNC ANT
3 LIGHTING BUS IN (GTR 200B only)
PILOT HS R
PLIOT HS L
PILOT HS LO
PILOT MIC
PILOT MIC LO
COPILOT HS R
COPILOT HS L
COPILOT HS LO
COPILOT MIC
COPILOT MIC LO
COPILOT PTT
PILOT PTT
CAN HI
CAN LO
POWER
GND
GTR 20 or GTR 200B VHF Com Radio
TR25
GAD 27 Radio Lighting Bus
AD03E
Potential sources of AUX audio:
PFD
MFD
CO Detector
Stall warner
GI 260 AOA
TR03
TR04
TR05
TR06
TR07
TR08
TR09
TR10
TR11
TR12
TR16
TR18
TR02/20
TR01/20
BLU
ORG
WHT
[PNL] Pilot HS Jack Switchcraft 12B
[PNL] Pilot Mic Jack Switchcraft S12B
[PNL] Copilot HS Jack Switchcraft 12B
[PNL] Copilot Mic Jack Switchcraft S12B
[PNL] MB2011SS1W01-BC
Panel PTT
TR17
TABS
TR16A
[SPNL] TB2-2
TR16B
[Copilot Stick Grip] C11 (EN3)
[Copilot Stick Grip] Ray Allen G405
TR16B
AD48
AD48
Copilot PTT
TR18
AD47
AD47
Pilot PTT
[Pilot Stick Grip] C12 (DB9)
[PNL] Pilot LEMO
PWR
GND
RX L
RX R
MIC HI
MIC LO
PILOT HS L
PLIOT HS R
PILOT MIC
PILOT MIC LO
TR13A
TR14A
TR04B
TR03B
TR06B
TR07B
[PNL] Copilot LEMO
GND
PWR
RX L
RX R
MIC HI
MIC LO
COPILOT HS L
COPLIOT HS R
COPILOT MIC
COPILOT MIC LO
TR14B
TR13B
TR09B
TR08B
TR11B
TR12B
[PNL] TB1-3
[PNL] TB1-2
3A
TR13
TR14
TABS
7.5A
TABS

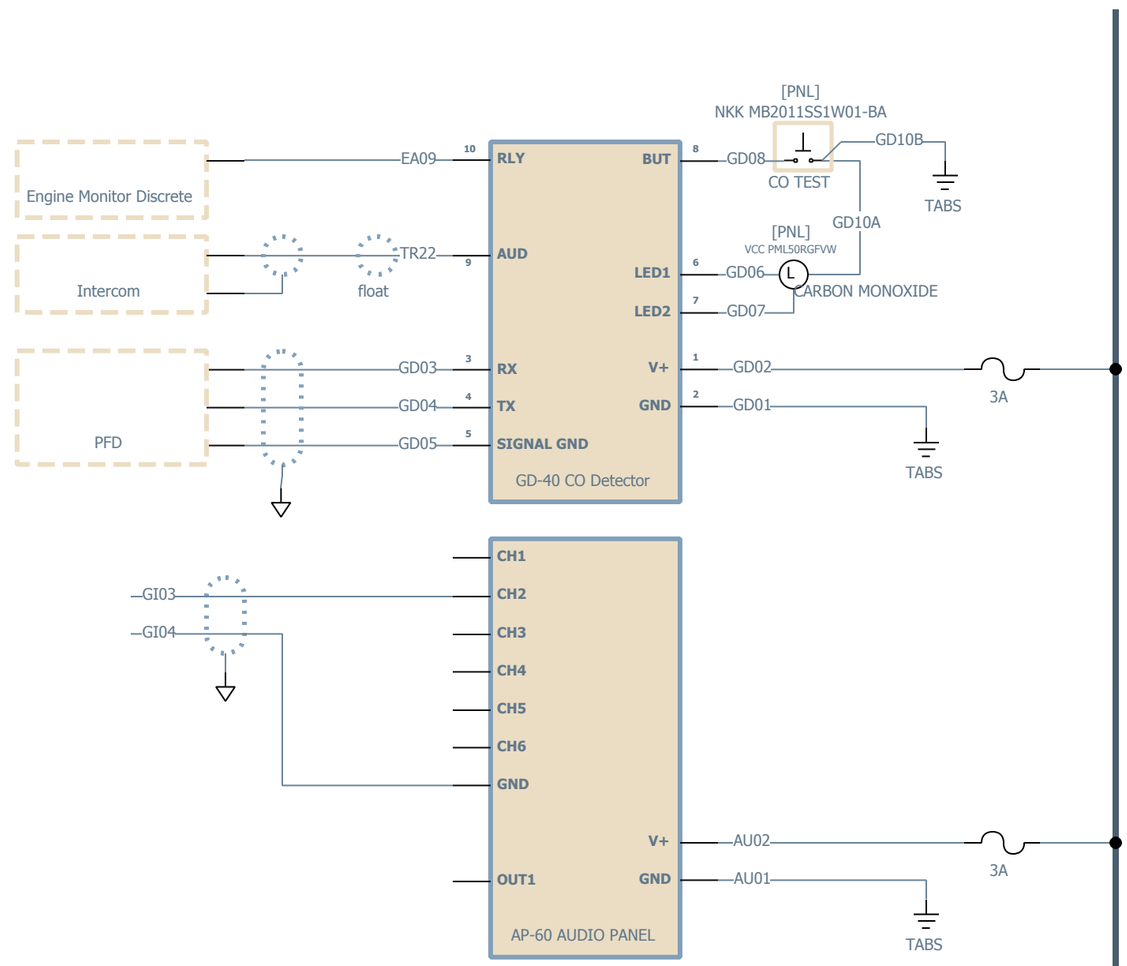
Engine Monitor Discrete
Intercom
PFD
EA09
TR22
float
GD03
GD04
GD05
RLY
AUD
RX
TX
SIGNAL GND
BUT
LED1
LED2
V+
GND
GD-40 CO Detector
[PNL]
NKK MB2011SS1W01-BA
GD08
GD10B
CO TEST
TABS
GD10A
[PNL]
VCC PML50RGFVW
GD06
GD07
CARBON MONOXIDE
GD02
GD01
3A
TABS
GI03
GI04
CH1
CH2
CH3
CH4
CH5
CH6
GND
OUT1
V+
GND
AP-60 AUDIO PANEL
AU02
AU01
3A
TABS

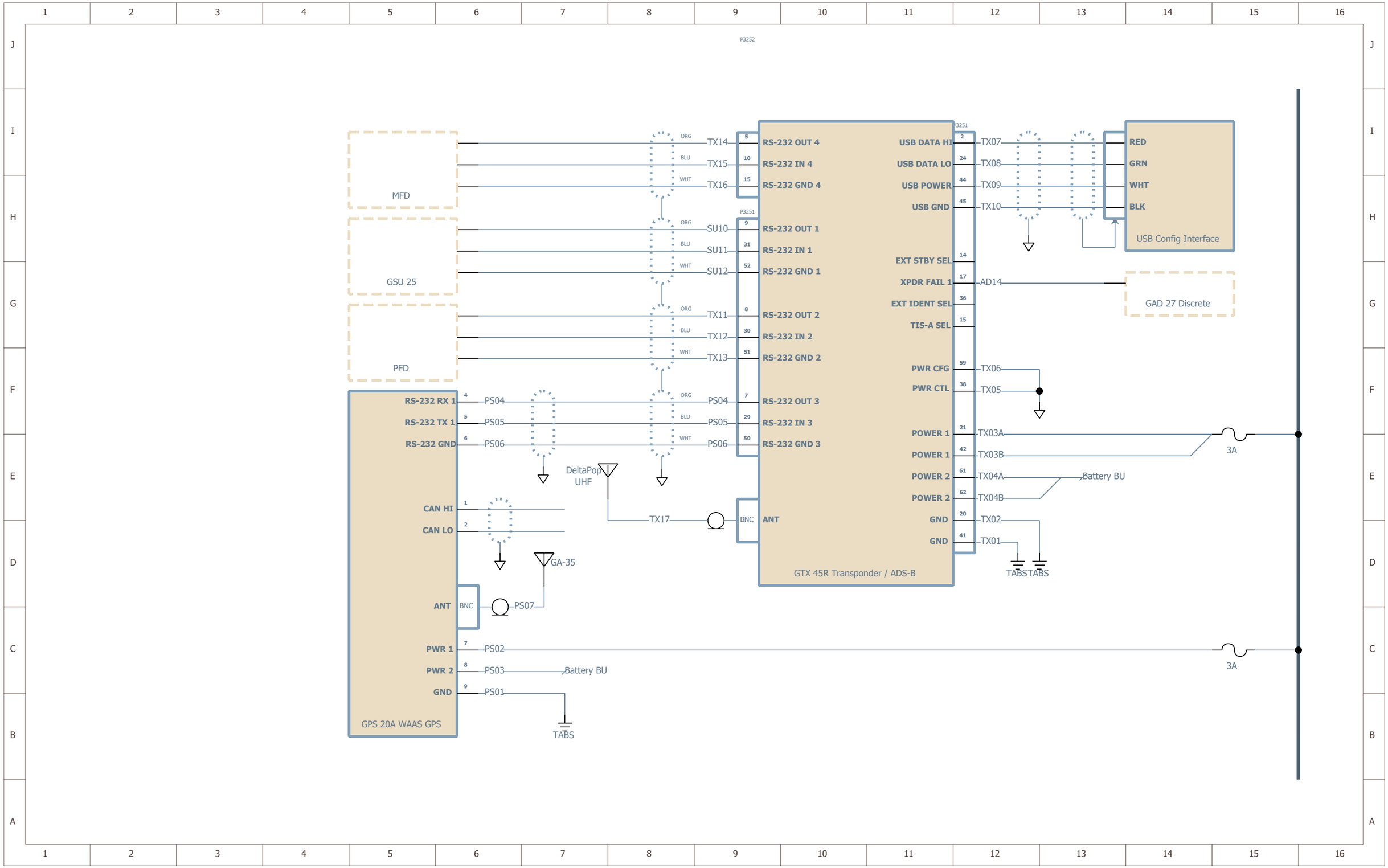
P3252
MFD
GSU 25
PFD
ORG
BLU
WHT
TX14
TX15
TX16
SU10
SU11
SU12
TX11
TX12
TX13
PS04
PS05
PS06
RS-232 RX 1
RS-232 TX 1
RS-232 GND
CAN HI
CAN LO
ANT
BNC
PS07
PWR 1
PWR 2
GND
PS02
PS03
PS01
Battery BU
TABS
GPS 20A WAAS GPS
DeltaPop
UHF
GA-35
TX17
P3251
RS-232 OUT 4
RS-232 IN 4
RS-232 GND 4
RS-232 OUT 1
RS-232 IN 1
RS-232 GND 1
RS-232 OUT 2
RS-232 IN 2
RS-232 GND 2
RS-232 OUT 3
RS-232 IN 3
RS-232 GND 3
USB DATA HI
USB DATA LO
USB POWER
USB GND
EXT STBY SEL
XPDR FAIL 1
EXT IDENT SEL
TIS-A SEL
PWR CFG
PWR CTL
POWER 1
POWER 1
POWER 2
POWER 2
GND
GND
TX07
TX08
TX09
TX10
AD14
TX06
TX05
TX03A
TX03B
TX04A
TX04B
TX02
TX01
3A
GTX 45R Transponder / ADS-B
RED
GRN
WHT
BLK
USB Config Interface
GAD 27 Discrete

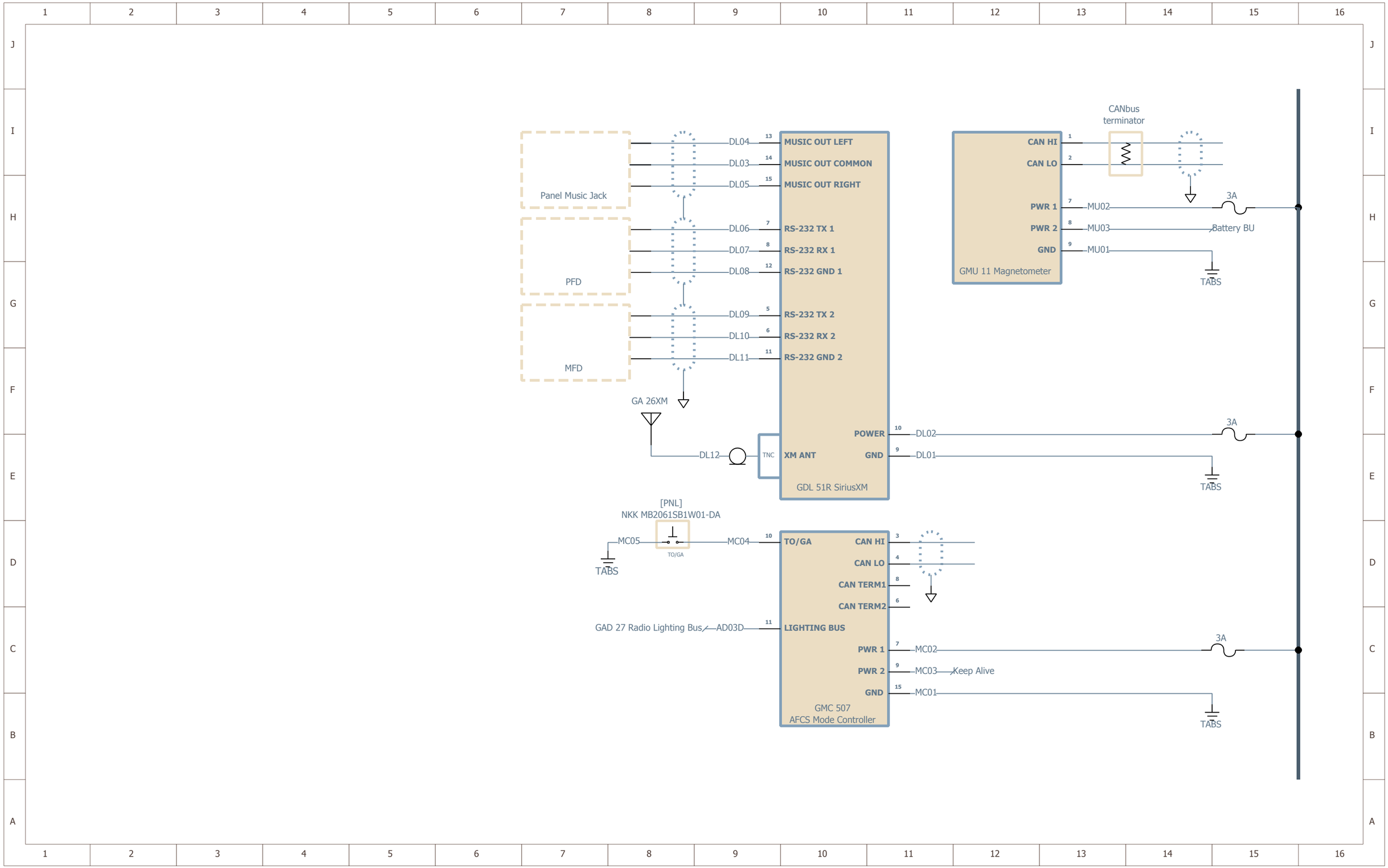
Panel Music Jack
PFD
MFD
DL04
DL03
DL05
DL06
DL07
DL08
DL09
DL10
DL11
MUSIC OUT LEFT
MUSIC OUT COMMON
MUSIC OUT RIGHT
RS-232 TX 1
RS-232 RX 1
RS-232 GND 1
RS-232 TX 2
RS-232 RX 2
RS-232 GND 2
GA 26XM
DL12
TNC
XM ANT
POWER
GND
DL02
DL01
GDL 51R SiriusXM
CANbus
terminator
CAN HI
CAN LO
PWR 1
PWR 2
GND
MU02
MU03
MU01
GMU 11 Magnetometer
3A
Battery BU
TABS
[PNL]
NKK MB2061SB1W01-DA
MC05
MC04
TO/GA
GAD 27 Radio Lighting Bus
AD03D
LIGHTING BUS
CAN TERM1
CAN TERM2
MC02
MC03
Keep Alive
MC01
GMC 507
AFCS Mode Controller

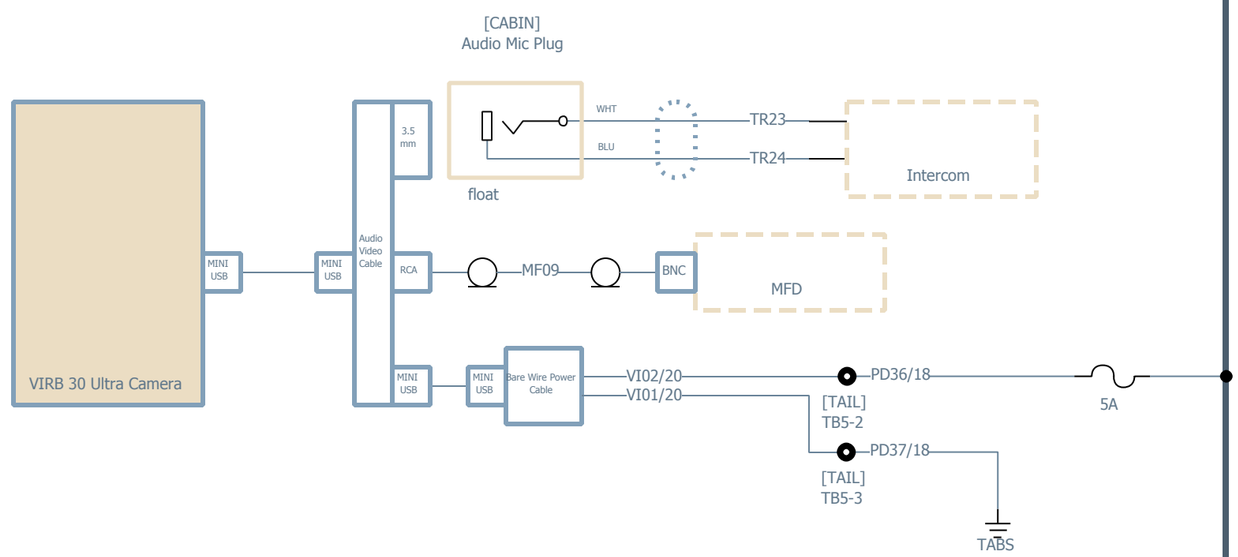
[CABIN]
Audio Mic Plug
WHT
BLU
TR23
TR24
Intercom
float
3.5 mm
VIRB 30 Ultra Camera
MINI USB
MINI USB
Audio Video Cable
RCA
MF09
BNC
MFD
MINI USB
MINI USB
Bare Wire Power Cable
VI02/20
VI01/20
PD36/18
[TAIL]
TB5-2
PD37/18
[TAIL]
TB5-3
5A
TABS