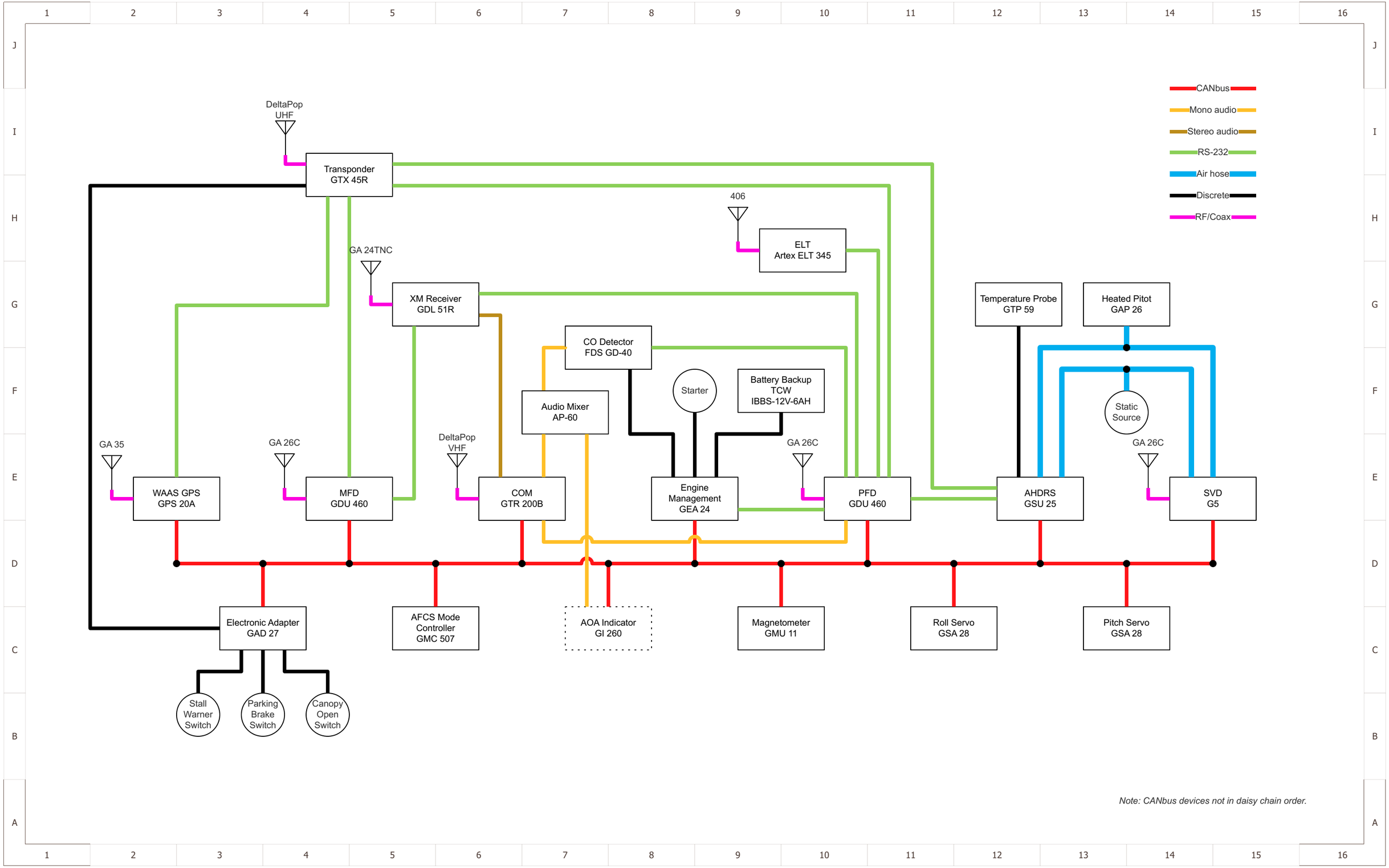
CANbus
Mono audio
Stereo audio
RS-232
Air hose
Discrete
RF/Coax
DeltaPop UHF
Transponder GTX 45R
406
ELT Artex ELT 345
GA 24TNC
XM Receiver GDL 51R
CO Detector FDS GD-40
Audio Mixer AP-60
Starter
Battery Backup TCW IBBS-12V-6AH
Temperature Probe GTP 59
Heated Pitot GAP 26
Static Source
GA 35
WAAS GPS GPS 20A
GA 26C
MFD GDU 460
DeltaPop VHF
COM GTR 200B
Engine Management GEA 24
GA 26C
PFD GDU 460
AHDRS GSU 25
GA 26C
SVD G5
Electronic Adapter GAD 27
AFCS Mode Controller GMC 507
AOA Indicator GI 260
Magnetometer GMU 11
Roll Servo GSA 28
Pitch Servo GSA 28
Stall Warner Switch
Parking Brake Switch
Canopy Open Switch
Note: CANbus devices not in daisy chain order.

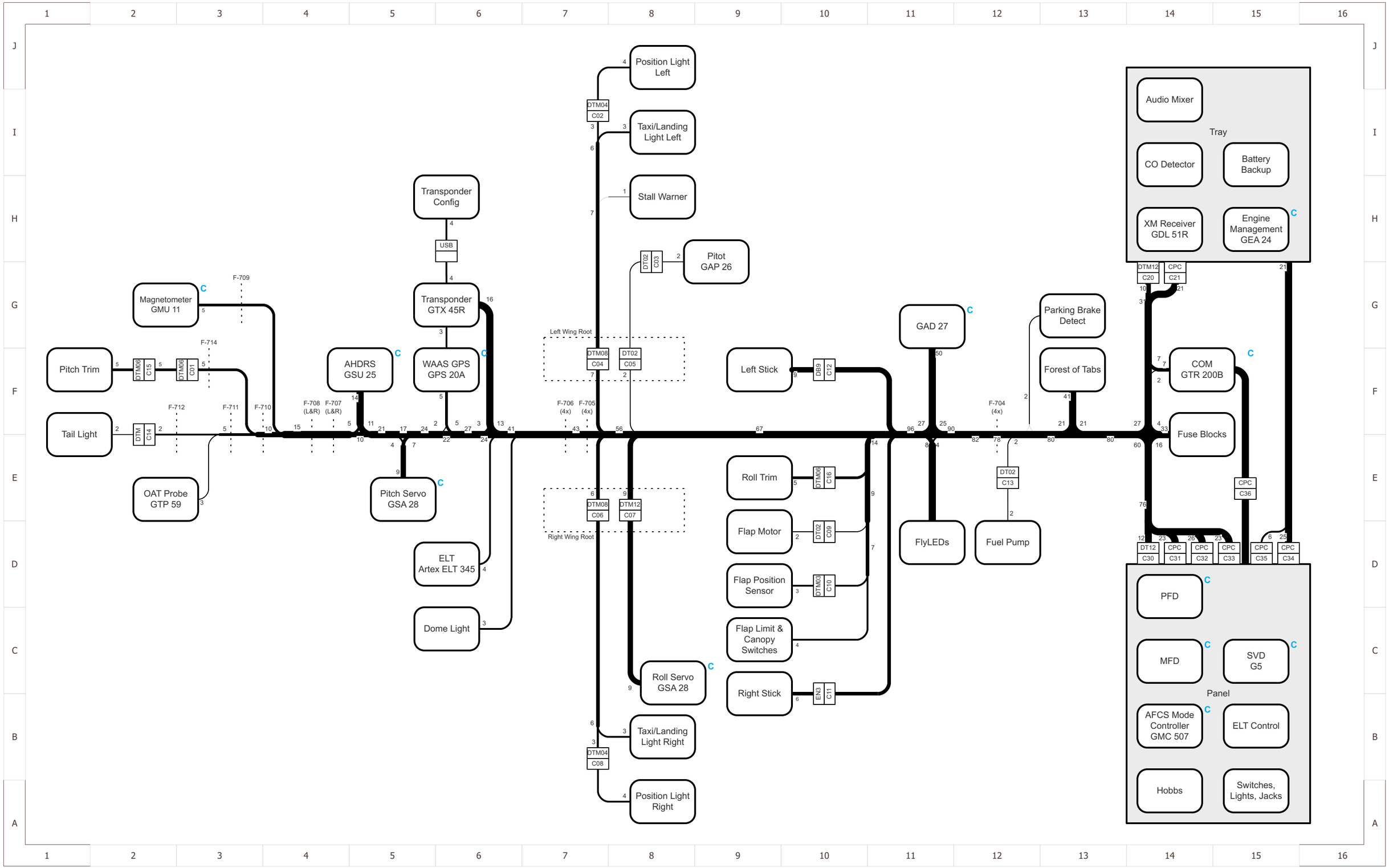
Position Light Left
Taxi/Landing Light Left
Stall Warner
Pitot GAP 26
Audio Mixer
Tray
CO Detector
Battery Backup
XM Receiver GDL 51R
Engine Management GEA 24
Transponder Config
USB
Transponder GTX 45R
Magnetometer GMU 11
Pitch Trim
Tail Light
AHDRS GSU 25
WAAS GPS GPS 20A
Left Wing Root
Right Wing Root
Left Stick
GAD 27
Parking Brake Detect
Forest of Tabs
COM GTR 200B
Fuse Blocks
OAT Probe GTP 59
Pitch Servo GSA 28
ELT Artex ELT 345
Dome Light
Roll Trim
Flap Motor
Flap Position Sensor
Flap Limit & Canopy Switches
Right Stick
FlyLEDs
Fuel Pump
Roll Servo GSA 28
Taxi/Landing Light Right
Position Light Right
PFD
MFD
SVD G5
Panel
AFCS Mode Controller GMC 507
ELT Control
Hobbs
Switches, Lights, Jacks

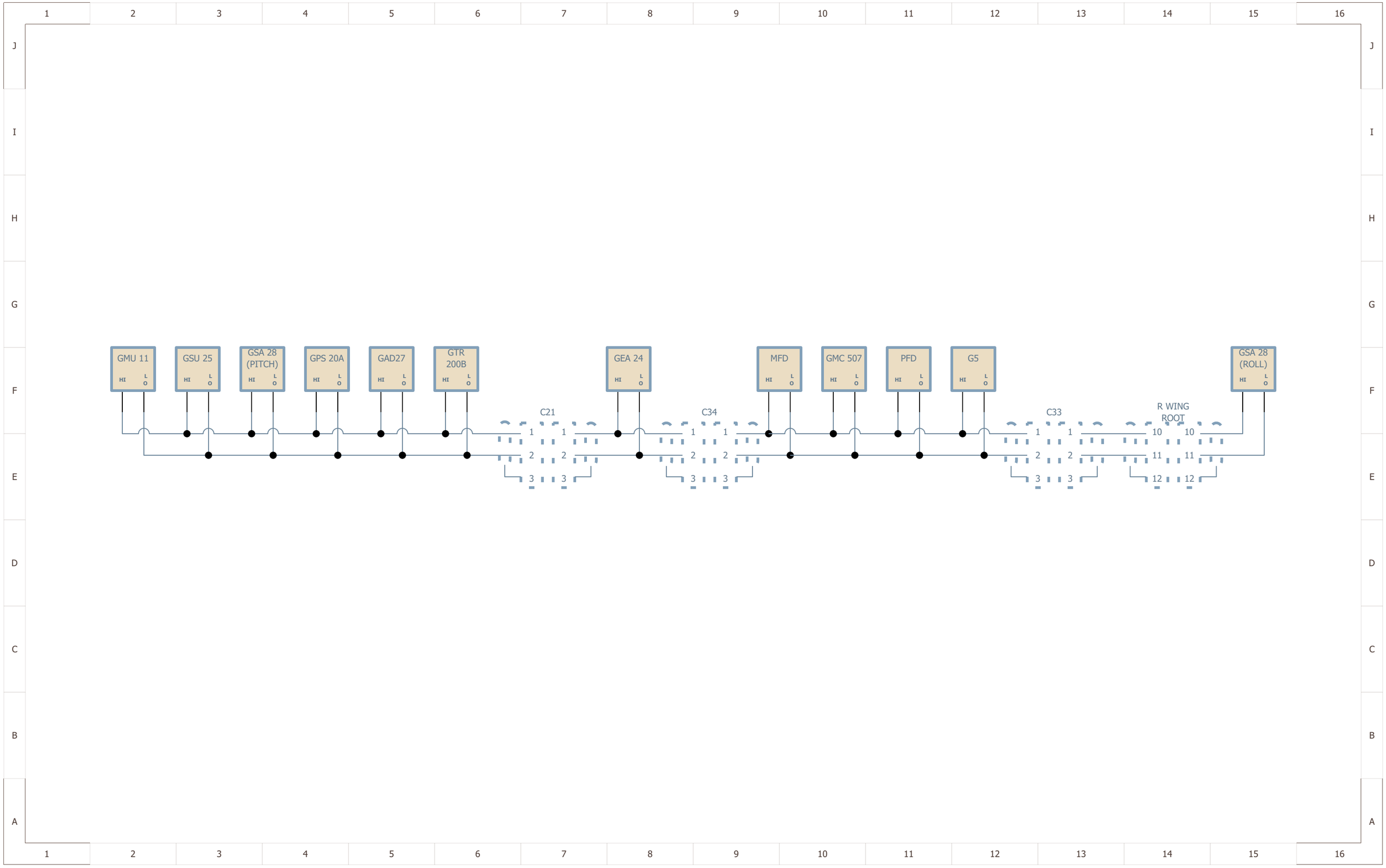
GMU 11
HI
LO
GSU 25
HI
LO
GSA 28 (PITCH)
HI
LO
GPS 20A
HI
LO
GAD27
HI
LO
GTR 200B
HI
LO
GEA 24
HI
LO
MFD
HI
LO
GMC 507
HI
LO
PFD
HI
LO
G5
HI
LO
GSA 28 (ROLL)
HI
LO
C21
C34
C33
R WING ROOT
1
2
3
10
11
12

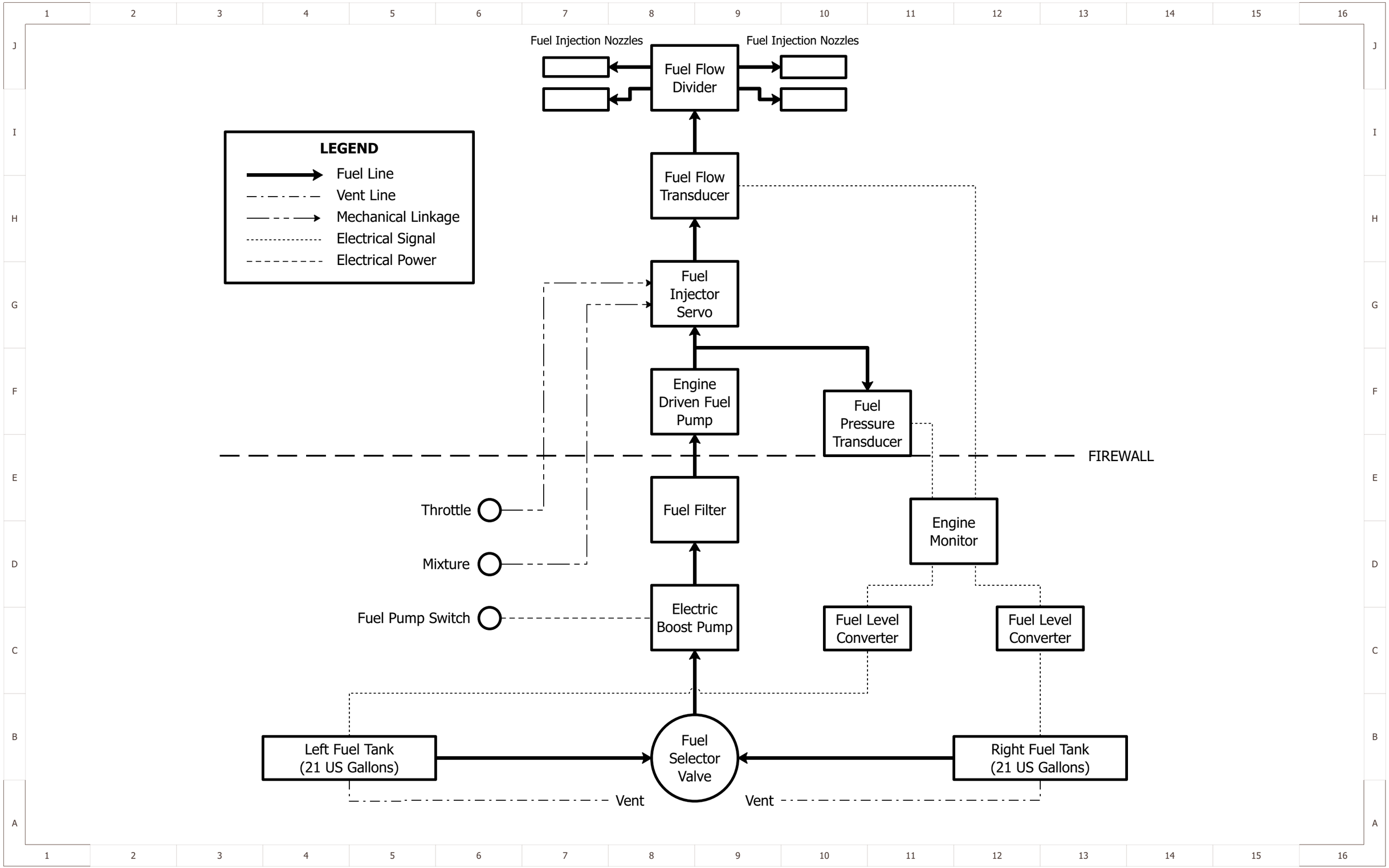
Fuel Injection Nozzles
Fuel Injection Nozzles
Fuel Flow Divider
LEGEND
Fuel Line
Vent Line
Mechanical Linkage
Electrical Signal
Electrical Power
Fuel Flow Transducer
Fuel Injector Servo
Engine Driven Fuel Pump
Fuel Pressure Transducer
FIREWALL
Throttle
Fuel Filter
Engine Monitor
Mixture
Fuel Pump Switch
Electric Boost Pump
Fuel Level Converter
Fuel Level Converter
Left Fuel Tank (21 US Gallons)
Fuel Selector Valve
Right Fuel Tank (21 US Gallons)
Vent
Vent

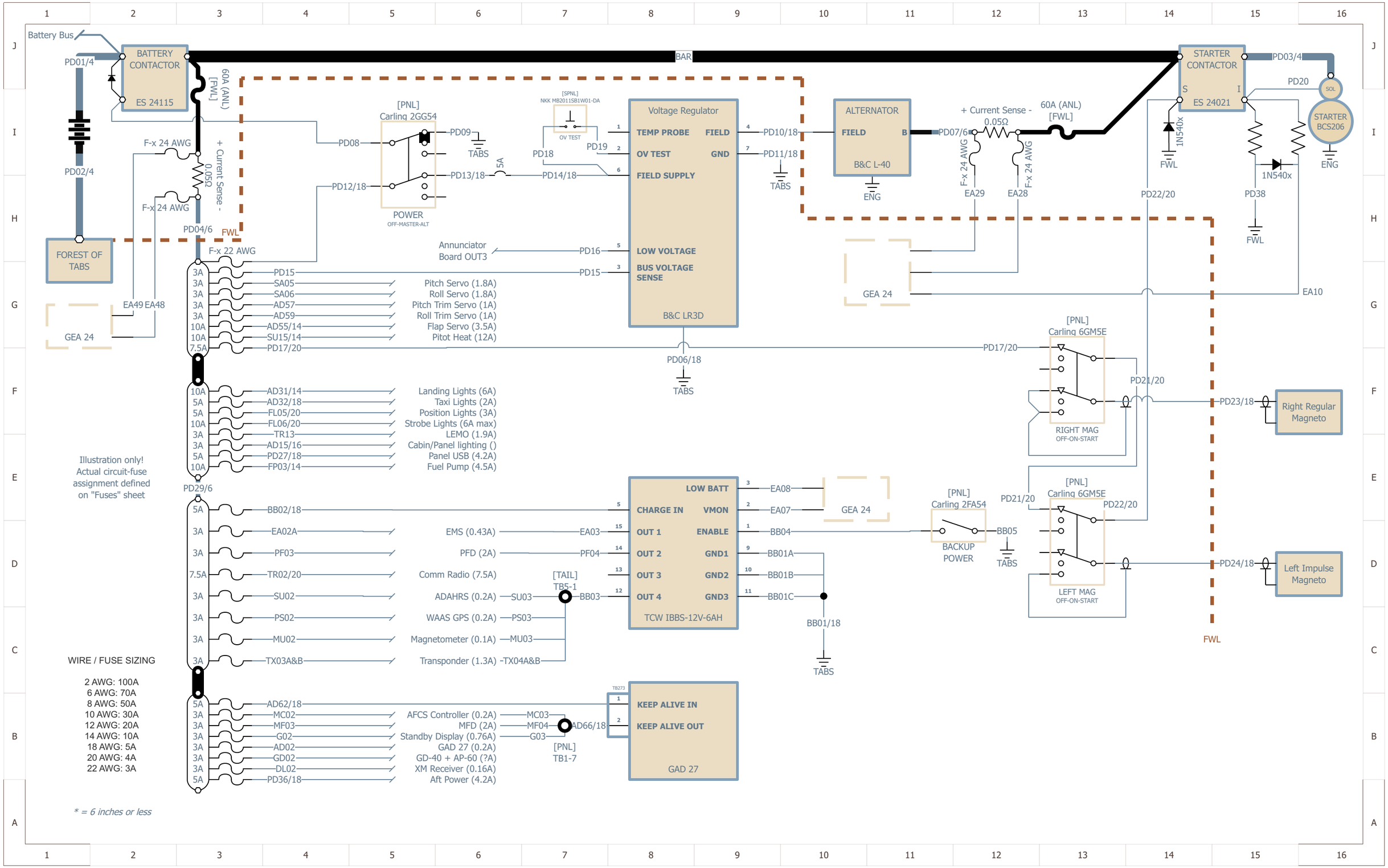
Battery Bus
BATTERY CONTACTOR
ES 24115
PD01/4
PD02/4
60A (ANL) [FWL]
BAR
STARTER CONTACTOR
ES 24021
PD03/4
PD20
STARTER BCS206
ENG
1N540x
FWL
PD38
F-x 24 AWG
+ Current Sense -
0.05Ω
PD04/6
FWL
FOREST OF TABS
F-x 22 AWG
EA49 EA48
GEA 24
[PNL] Carling 2GG54
POWER
OFF-MASTER-ALT
PD08
PD09
TABS
PD12/18
PD13/18
5A
[SPNL] NKK MB2011SB1W01-DA
OV TEST
PD18
PD19
PD14/18
Voltage Regulator
TEMP PROBE
OV TEST
FIELD SUPPLY
FIELD
GND
LOW VOLTAGE
BUS VOLTAGE SENSE
B&C LR3D
PD10/18
PD11/18
ALTERNATOR
FIELD
B
B&C L-40
PD07/6
EA29
EA28
PD22/20
EA10
Annunciator Board OUT3
PD16
PD15
PD06/18
3A Pitch Servo (1.8A)
3A Roll Servo (1.8A)
3A Pitch Trim Servo (1A)
3A Roll Trim Servo (1A)
10A Flap Servo (3.5A)
10A Pitot Heat (12A)
7.5A
SA05
SA06
AD57
AD59
AD55/14
SU15/14
PD17/20
[PNL] Carling 6GM5E
RIGHT MAG
OFF-ON-START
PD21/20
PD23/18
Right Regular Magneto
10A Landing Lights (6A)
5A Taxi Lights (2A)
5A Position Lights (3A)
10A Strobe Lights (6A max)
3A LEMO (1.9A)
3A Cabin/Panel lighting ()
5A Panel USB (4.2A)
10A Fuel Pump (4.5A)
AD31/14
AD32/18
FL05/20
FL06/20
TR13
AD15/16
PD27/18
FP03/14
PD29/6
Illustration only!
Actual circuit-fuse assignment defined on "Fuses" sheet
LOW BATT
CHARGE IN
OUT 1
OUT 2
OUT 3
OUT 4
VMON
ENABLE
GND1
GND2
GND3
TCW IBBS-12V-6AH
EA08
EA07
BB04
BB01A
BB01B
BB01C
BB01/18
GEA 24
[PNL] Carling 2FA54
BACKUP POWER
BB05
[PNL] Carling 6GM5E
LEFT MAG
OFF-ON-START
PD24/18
Left Impulse Magneto
5A BB02/18
3A EA02A EMS (0.43A) EA03
3A PF03 PFD (2A) PF04
7.5A TR02/20 Comm Radio (7.5A)
3A SU02 ADAHRS (0.2A) SU03
3A PS02 WAAS GPS (0.2A) PS03
3A MU02 Magnetometer (0.1A) MU03
3A TX03A&B Transponder (1.3A) TX04A&B
[TAIL] TB5-1
BB03
WIRE / FUSE SIZING
2 AWG: 100A
6 AWG: 70A
8 AWG: 50A
10 AWG: 30A
12 AWG: 20A
14 AWG: 10A
18 AWG: 5A
20 AWG: 4A
22 AWG: 3A
5A AD62/18
3A MC02 AFCS Controller (0.2A) MC03
3A MF03 MFD (2A) MF04
3A G02 Standby Display (0.76A) G03
3A AD02 GAD 27 (0.2A)
3A GD02 GD-40 + AP-60 (?A)
3A DL02 XM Receiver (0.16A)
5A PD36/18 Aft Power (4.2A)
AD66/18
[PNL] TB1-7
TB273
KEEP ALIVE IN
KEEP ALIVE OUT
GAD 27
* = 6 inches or less

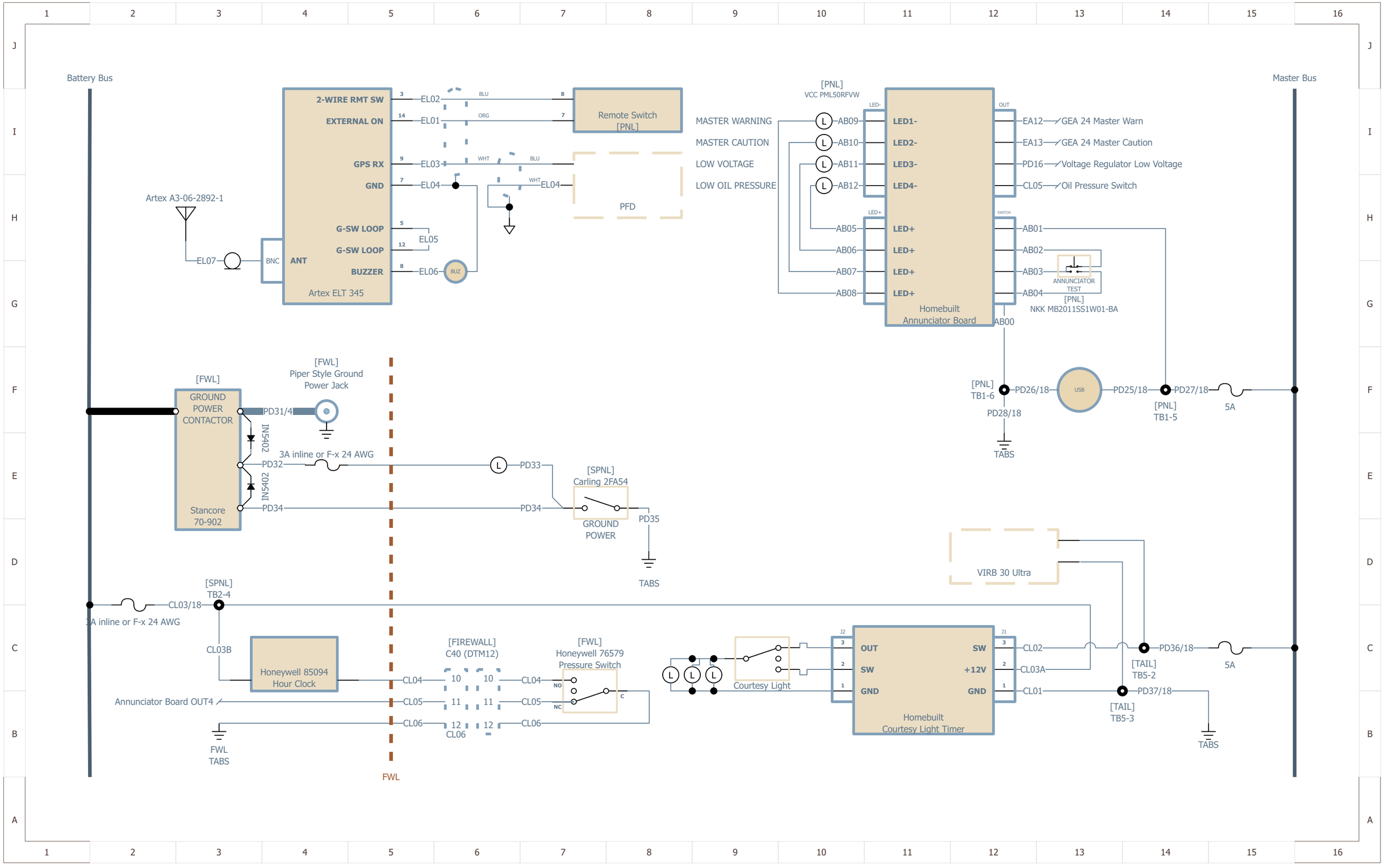
Battery Bus
Master Bus
2-WIRE RMT SW
EXTERNAL ON
GPS RX
GND
G-SW LOOP
G-SW LOOP
BUZZER
ANT
Artex ELT 345
EL02
EL01
EL03
EL04
EL05
EL06
EL07
BLU
ORG
WHT
BLU
WHT
EL04
BUZ
BNC
Artex A3-06-2892-1
Remote Switch
[PNL]
PFD
[PNL]
VCC PML50RFVW
MASTER WARNING
MASTER CAUTION
LOW VOLTAGE
LOW OIL PRESSURE
AB09
AB10
AB11
AB12
AB05
AB06
AB07
AB08
LED-
LED1-
LED2-
LED3-
LED4-
LED+
LED+
LED+
LED+
OUT
EA12
EA13
PD16
CL05
GEA 24 Master Warn
GEA 24 Master Caution
Voltage Regulator Low Voltage
Oil Pressure Switch
SWITCH
AB01
AB02
AB03
AB04
ANNUNCIATOR TEST
[PNL]
NKK MB2011SS1W01-BA
Homebuilt
Annunciator Board
AB00
[PNL]
TB1-6
PD26/18
USB
PD25/18
PD27/18
5A
[PNL]
TB1-5
PD28/18
TABS
[FWL]
GROUND
POWER
CONTACTOR
Stancore
70-902
PD31/4
IN5402
IN5402
PD32
PD34
[FWL]
Piper Style Ground
Power Jack
3A inline or F-x 24 AWG
PD33
PD34
[SPNL]
Carling 2FA54
GROUND
POWER
PD35
TABS
VIRB 30 Ultra
[SPNL]
TB2-4
CL03/18
3A inline or F-x 24 AWG
CL03B
Honeywell 85094
Hour Clock
Annunciator Board OUT4
FWL
TABS
[FIREWALL]
C40 (DTM12)
CL04
CL05
CL06
10
11
12
[FWL]
Honeywell 76579
Pressure Switch
NO
NC
C
FWL
Courtesy Light
J2
OUT
SW
GND
J1
SW
+12V
GND
CL02
CL03A
CL01
Homebuilt
Courtesy Light Timer
PD36/18
5A
[TAIL]
TB5-2
PD37/18
[TAIL]
TB5-3
TABS

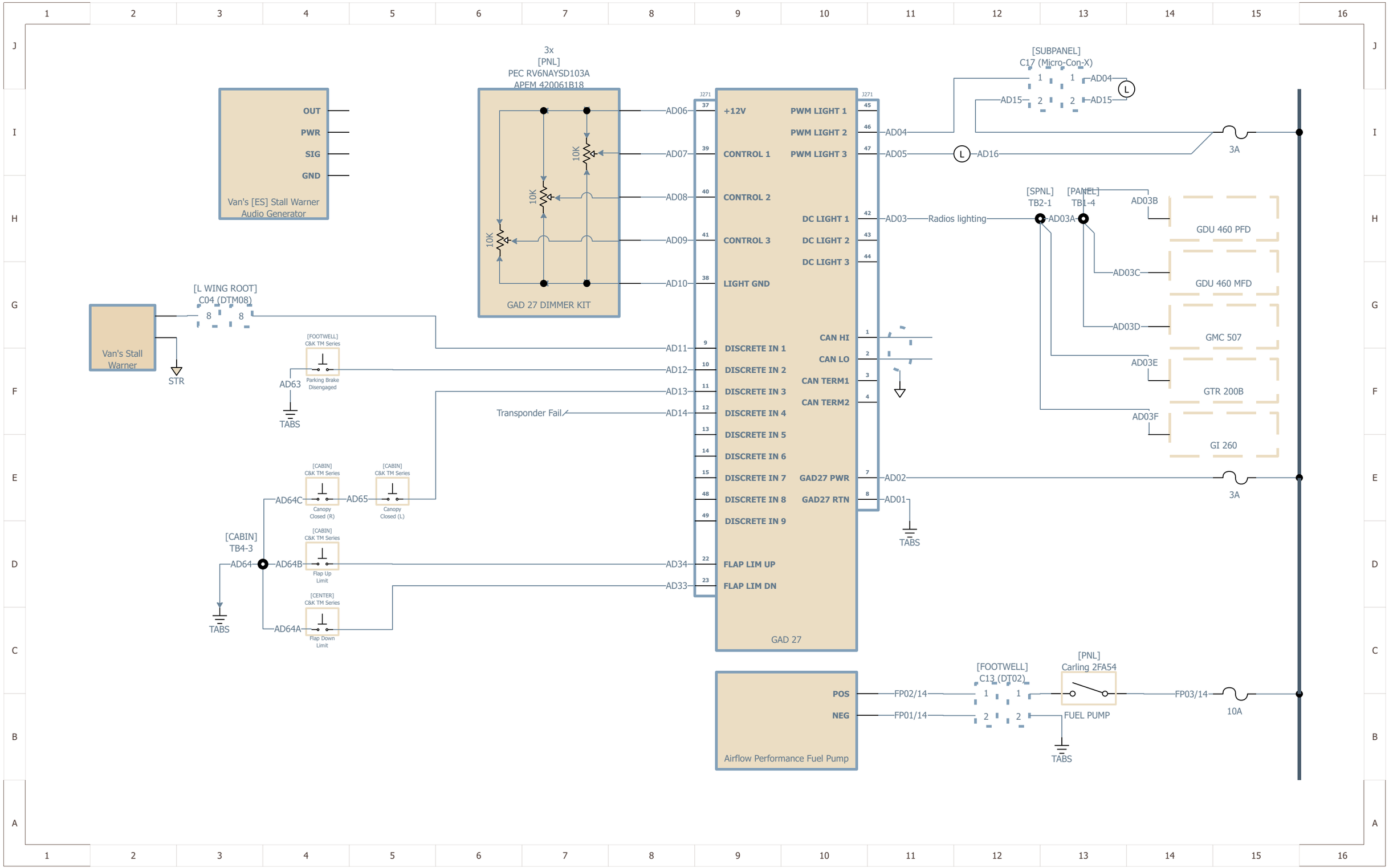
Van's [ES] Stall Warner Audio Generator
OUT
PWR
SIG
GND
3x
[PNL]
PEC RV6NAYSD103A
APEM 420061B18
10K
GAD 27 DIMMER KIT
[L WING ROOT]
C04 (DTM08)
Van's Stall Warner
STR
[FOOTWELL]
C&K TM Series
Parking Brake Disengaged
AD63
TABS
[CABIN]
C&K TM Series
Canopy Closed (R)
Canopy Closed (L)
AD64C
AD65
[CABIN]
TB4-3
AD64
AD64B
Flap Up Limit
[CENTER]
C&K TM Series
AD64A
Flap Down Limit
Transponder Fail
J271
+12V
CONTROL 1
CONTROL 2
CONTROL 3
LIGHT GND
DISCRETE IN 1
DISCRETE IN 2
DISCRETE IN 3
DISCRETE IN 4
DISCRETE IN 5
DISCRETE IN 6
DISCRETE IN 7
DISCRETE IN 8
DISCRETE IN 9
FLAP LIM UP
FLAP LIM DN
PWM LIGHT 1
PWM LIGHT 2
PWM LIGHT 3
DC LIGHT 1
DC LIGHT 2
DC LIGHT 3
CAN HI
CAN LO
CAN TERM1
CAN TERM2
GAD27 PWR
GAD27 RTN
GAD 27
AD06
AD07
AD08
AD09
AD10
AD11
AD12
AD13
AD14
AD34
AD33
AD04
AD05
AD16
AD03
Radios lighting
AD02
AD01
[SUBPANEL]
C17 (Micro-Con-X)
AD15
3A
[SPNL]
TB2-1
[PANEL]
TB1-4
AD03A
AD03B
AD03C
AD03D
AD03E
AD03F
GDU 460 PFD
GDU 460 MFD
GMC 507
GTR 200B
GI 260
Airflow Performance Fuel Pump
POS
NEG
FP02/14
FP01/14
[FOOTWELL]
C13 (DT02)
[PNL]
Carling 2FA54
FUEL PUMP
FP03/14
10A

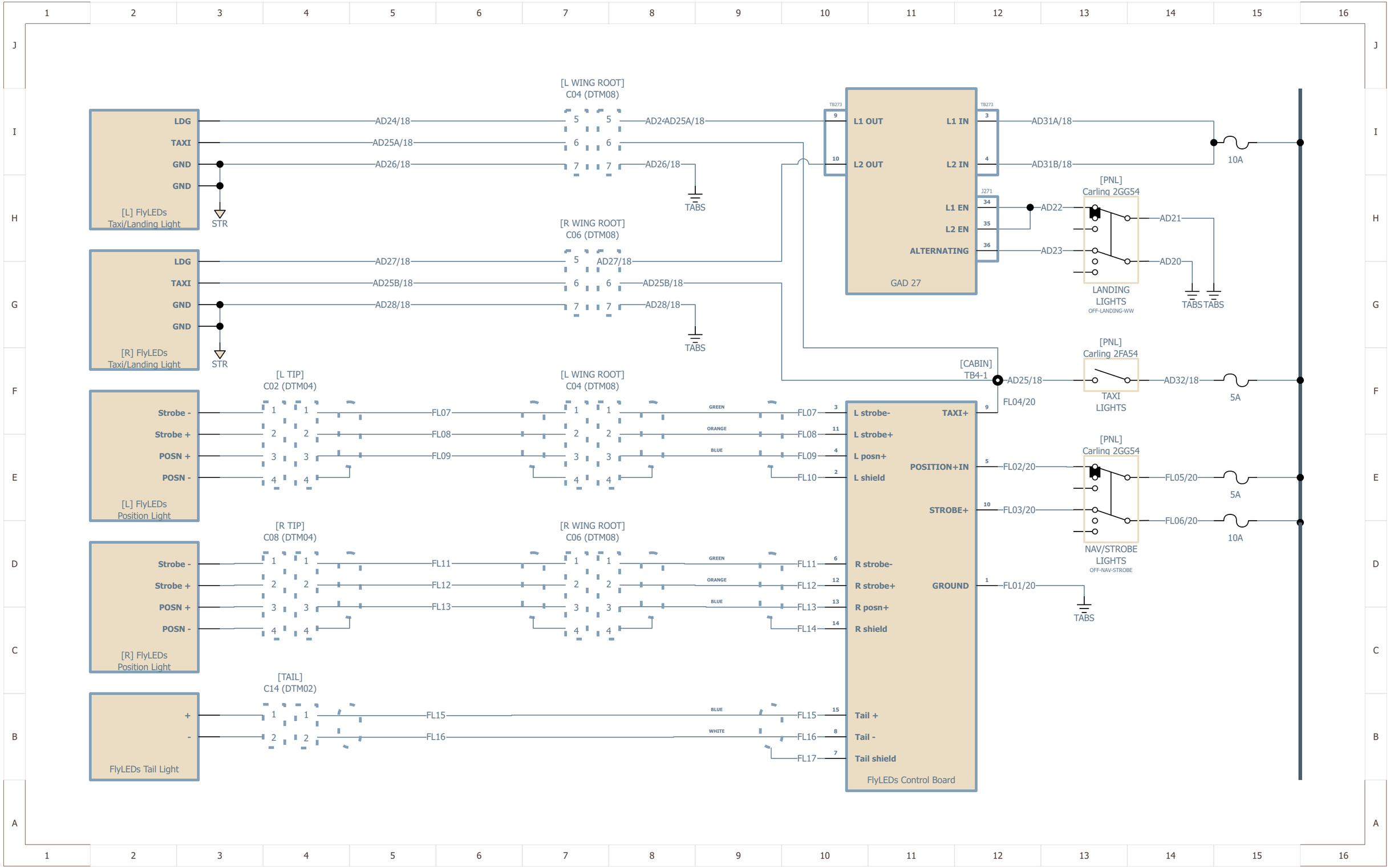
[L] FlyLEDs
Taxi/Landing Light
LDG
TAXI
GND
GND
STR
[R] FlyLEDs
Taxi/Landing Light
[L] FlyLEDs
Position Light
[R] FlyLEDs
Position Light
FlyLEDs Tail Light
Strobe -
Strobe +
POSN +
POSN -
[L WING ROOT]
C04 (DTM08)
[R WING ROOT]
C06 (DTM08)
[L TIP]
C02 (DTM04)
[R TIP]
C08 (DTM04)
[TAIL]
C14 (DTM02)
AD24/18
AD25A/18
AD26/18
AD27/18
AD25B/18
AD28/18
AD24/AD25A/18
TABS
FL07
FL08
FL09
FL11
FL12
FL13
FL15
FL16
GREEN
ORANGE
BLUE
WHITE
FL10
FL14
FL17
GAD 27
L1 OUT
L2 OUT
L1 IN
L2 IN
L1 EN
L2 EN
ALTERNATING
AD31A/18
AD31B/18
10A
AD22
AD23
AD21
AD20
[PNL]
Carling 2GG54
LANDING
LIGHTS
OFF-LANDING-WW
[CABIN]
TB4-1
AD25/18
FL04/20
[PNL]
Carling 2FA54
TAXI
LIGHTS
AD32/18
5A
FL02/20
FL03/20
FL01/20
NAV/STROBE
LIGHTS
OFF-NAV-STROBE
FL05/20
FL06/20
L strobe-
L strobe+
L posn+
L shield
R strobe-
R strobe+
R posn+
R shield
Tail +
Tail -
Tail shield
TAXI+
POSITION+IN
STROBE+
GROUND
FlyLEDs Control Board

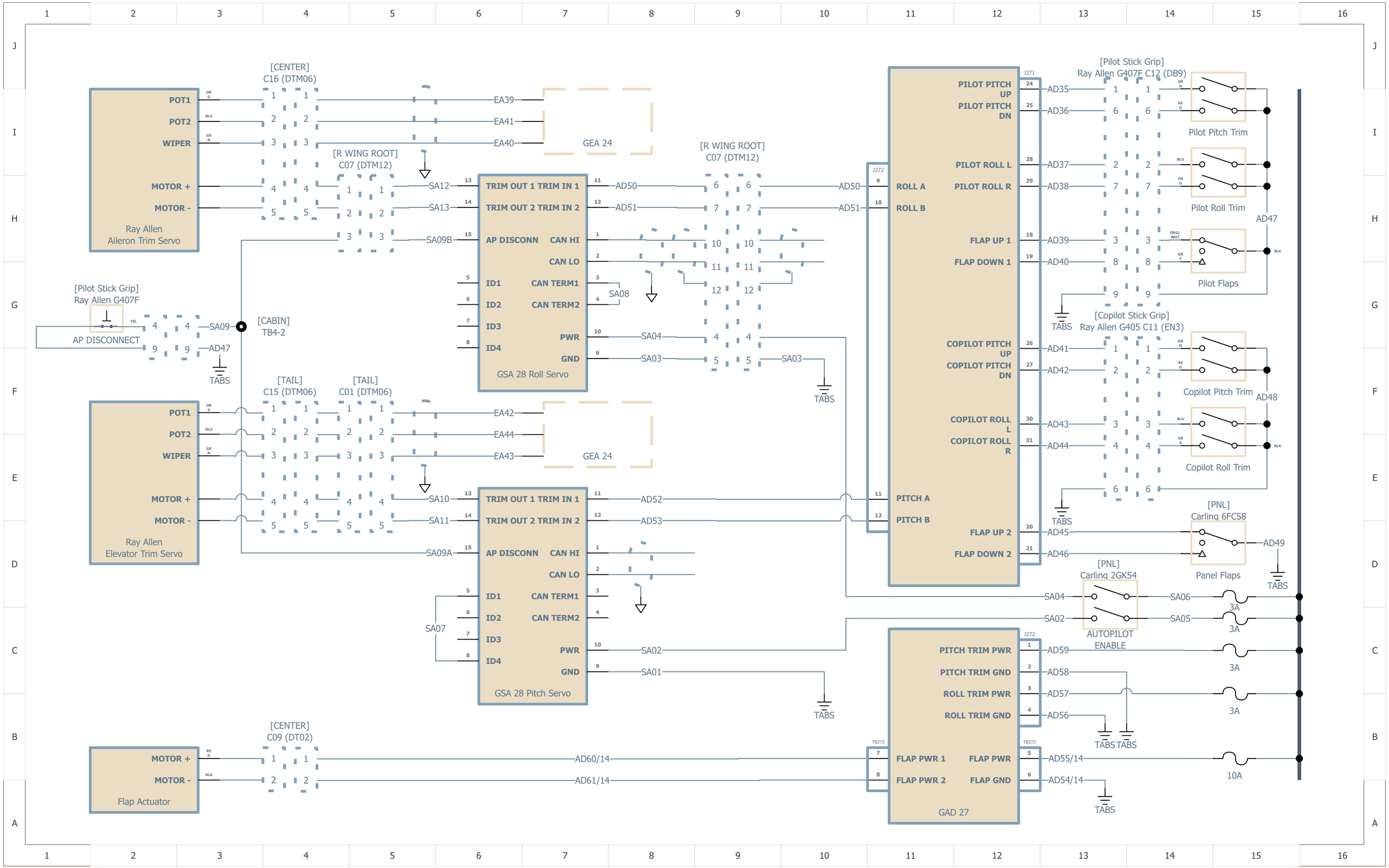
Ray Allen
Aileron Trim Servo
POT1
POT2
WIPER
MOTOR +
MOTOR -
[CENTER]
C16 (DTM06)
EA39
EA41
EA40
GEA 24
[R WING ROOT]
C07 (DTM12)
SA12
SA13
SA09B
TRIM OUT 1 TRIM IN 1
TRIM OUT 2 TRIM IN 2
AP DISCONN
CAN HI
CAN LO
ID1
ID2
ID3
ID4
CAN TERM1
CAN TERM2
PWR
GND
GSA 28 Roll Servo
AD50
AD51
SA08
SA04
SA03
[Pilot Stick Grip]
Ray Allen G407F
AP DISCONNECT
SA09
AD47
TABS
[CABIN]
TB4-2
Ray Allen
Elevator Trim Servo
[TAIL]
C15 (DTM06)
[TAIL]
C01 (DTM06)
EA42
EA44
EA43
SA10
SA11
SA09A
SA07
GSA 28 Pitch Servo
AD52
AD53
SA02
SA01
[CENTER]
C09 (DT02)
Flap Actuator
AD60/14
AD61/14
J271
J272
PILOT PITCH UP
PILOT PITCH DN
PILOT ROLL L
PILOT ROLL R
FLAP UP 1
FLAP DOWN 1
COPILOT PITCH UP
COPILOT PITCH DN
COPILOT ROLL L
COPILOT ROLL R
ROLL A
ROLL B
PITCH A
PITCH B
FLAP UP 2
FLAP DOWN 2
AD35
AD36
AD37
AD38
AD39
AD40
AD41
AD42
AD43
AD44
AD45
AD46
[Pilot Stick Grip]
Ray Allen G407F C12 (DB9)
Pilot Pitch Trim
Pilot Roll Trim
Pilot Flaps
[Copilot Stick Grip]
Ray Allen G405 C11 (EN3)
Copilot Pitch Trim
Copilot Roll Trim
AD48
[PNL]
Carling 6FC58
Panel Flaps
AD49
[PNL]
Carling 2GK54
AUTOPILOT
ENABLE
SA06
SA05
3A
PITCH TRIM PWR
PITCH TRIM GND
ROLL TRIM PWR
ROLL TRIM GND
AD59
AD58
AD57
AD56
TB273
FLAP PWR 1
FLAP PWR 2
FLAP PWR
FLAP GND
AD55/14
AD54/14
10A
GAD 27

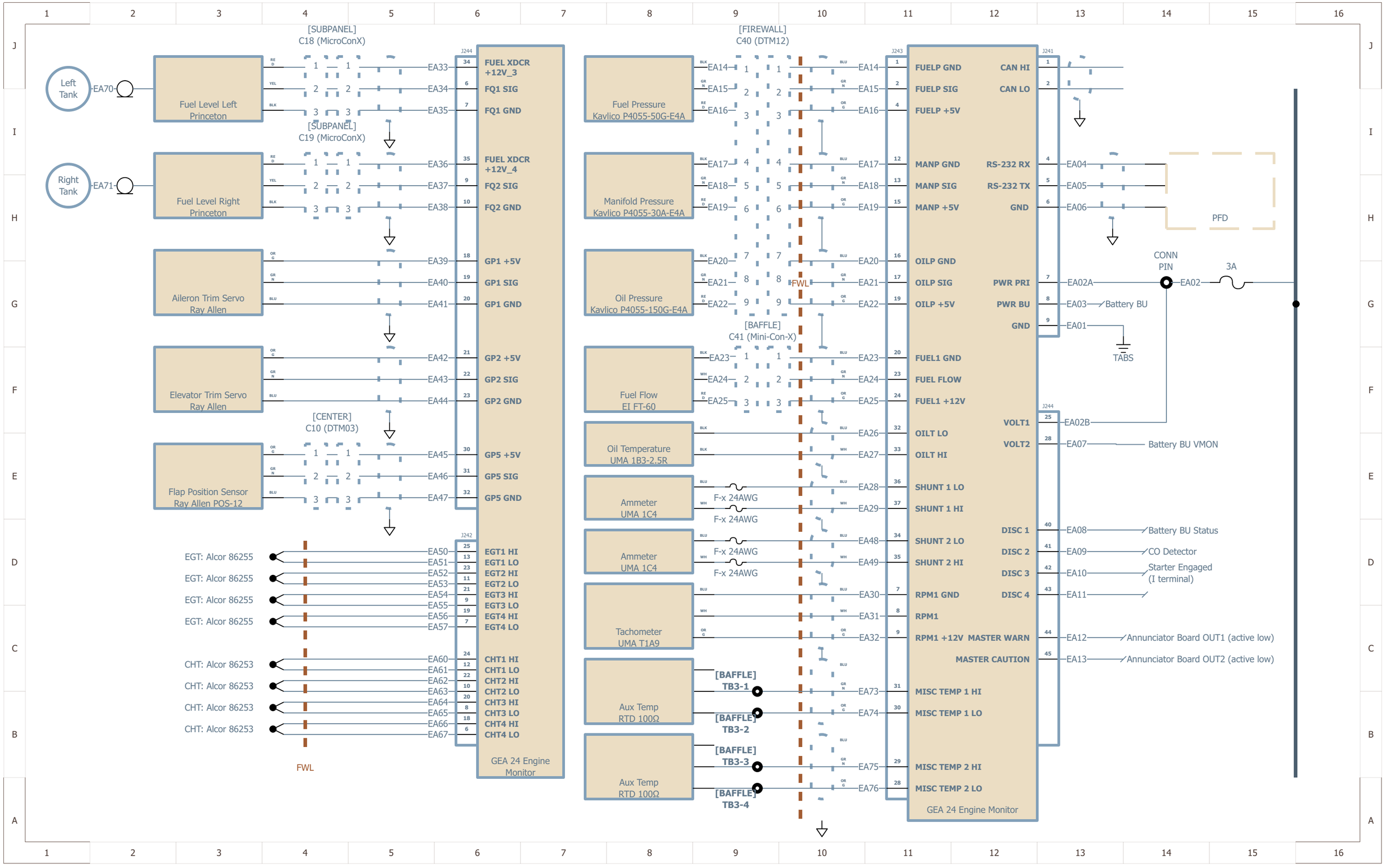
[SUBPANEL]
C18 (MicroConX)
[SUBPANEL]
C19 (MicroConX)
[CENTER]
C10 (DTM03)
[FIREWALL]
C40 (DTM12)
[BAFFLE]
C41 (Mini-Con-X)
FWL
Left Tank
EA70
Right Tank
EA71
Fuel Level Left Princeton
Fuel Level Right Princeton
Aileron Trim Servo Ray Allen
Elevator Trim Servo Ray Allen
Flap Position Sensor Ray Allen POS-12
EGT: Alcor 86255
CHT: Alcor 86253
EA33 FUEL XDCR +12V_3
EA34 FQ1 SIG
EA35 FQ1 GND
EA36 FUEL XDCR +12V_4
EA37 FQ2 SIG
EA38 FQ2 GND
EA39 GP1 +5V
EA40 GP1 SIG
EA41 GP1 GND
EA42 GP2 +5V
EA43 GP2 SIG
EA44 GP2 GND
EA45 GP5 +5V
EA46 GP5 SIG
EA47 GP5 GND
EA50 EGT1 HI
EA51 EGT1 LO
EA52 EGT2 HI
EA53 EGT2 LO
EA54 EGT3 HI
EA55 EGT3 LO
EA56 EGT4 HI
EA57 EGT4 LO
EA60 CHT1 HI
EA61 CHT1 LO
EA62 CHT2 HI
EA63 CHT2 LO
EA64 CHT3 HI
EA65 CHT3 LO
EA66 CHT4 HI
EA67 CHT4 LO
GEA 24 Engine Monitor
Fuel Pressure Kavlico P4055-50G-E4A
Manifold Pressure Kavlico P4055-30A-E4A
Oil Pressure Kavlico P4055-150G-E4A
Fuel Flow EI FT-60
Oil Temperature UMA 1B3-2.5R
Ammeter UMA 1C4
Ammeter UMA 1C4
Tachometer UMA T1A9
Aux Temp RTD 100Ω
Aux Temp RTD 100Ω
F-x 24AWG
F-x 24AWG
F-x 24AWG
F-x 24AWG
[BAFFLE] TB3-1
[BAFFLE] TB3-2
[BAFFLE] TB3-3
[BAFFLE] TB3-4
EA14 FUELP GND
EA15 FUELP SIG
EA16 FUELP +5V
EA17 MANP GND
EA18 MANP SIG
EA19 MANP +5V
EA20 OILP GND
EA21 OILP SIG
EA22 OILP +5V
EA23 FUEL1 GND
EA24 FUEL FLOW
EA25 FUEL1 +12V
EA26 OILT LO
EA27 OILT HI
EA28 SHUNT 1 LO
EA29 SHUNT 1 HI
EA48 SHUNT 2 LO
EA49 SHUNT 2 HI
EA30 RPM1 GND
EA31 RPM1
EA32 RPM1 +12V
EA73 MISC TEMP 1 HI
EA74 MISC TEMP 1 LO
EA75 MISC TEMP 2 HI
EA76 MISC TEMP 2 LO
GEA 24 Engine Monitor
CAN HI
CAN LO
RS-232 RX
RS-232 TX
GND
PWR PRI
PWR BU
GND
VOLT1
VOLT2
DISC 1
DISC 2
DISC 3
DISC 4
MASTER WARN
MASTER CAUTION
EA04
EA05
EA06
PFD
CONN PIN
EA02
3A
EA02A
EA03
Battery BU
EA01
TABS
EA02B
EA07
Battery BU VMON
EA08
Battery BU Status
EA09
CO Detector
EA10
Starter Engaged (I terminal)
EA11
EA12
Annunciator Board OUT1 (active low)
EA13
Annunciator Board OUT2 (active low)

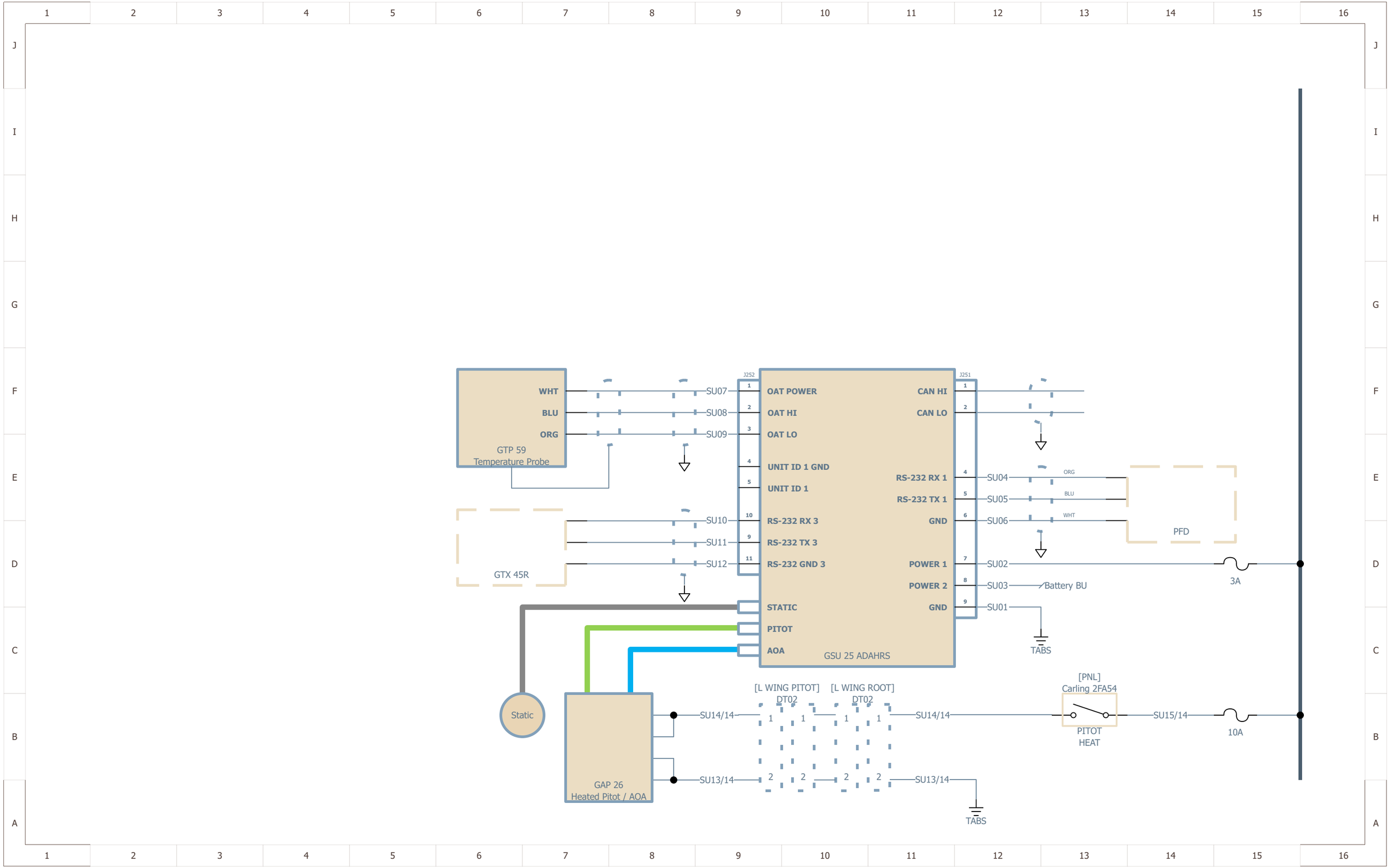
WHT
BLU
ORG
GTP 59
Temperature Probe
SU07
SU08
SU09
J252
OAT POWER
OAT HI
OAT LO
UNIT ID 1 GND
UNIT ID 1
RS-232 RX 1
RS-232 TX 1
GND
POWER 1
POWER 2
GND
CAN HI
CAN LO
J251
SU04
SU05
SU06
ORG
BLU
WHT
PFD
SU10
SU11
SU12
RS-232 RX 3
RS-232 TX 3
RS-232 GND 3
GTX 45R
SU02
3A
SU03
Battery BU
SU01
TABS
STATIC
PITOT
AOA
GSU 25 ADAHRS
Static
GAP 26
Heated Pitot / AOA
SU14/14
SU13/14
[L WING PITOT]
DT02
[L WING ROOT]
DT02
SU14/14
SU13/14
TABS
[PNL]
Carling 2FA54
PITOT
HEAT
SU15/14
10A

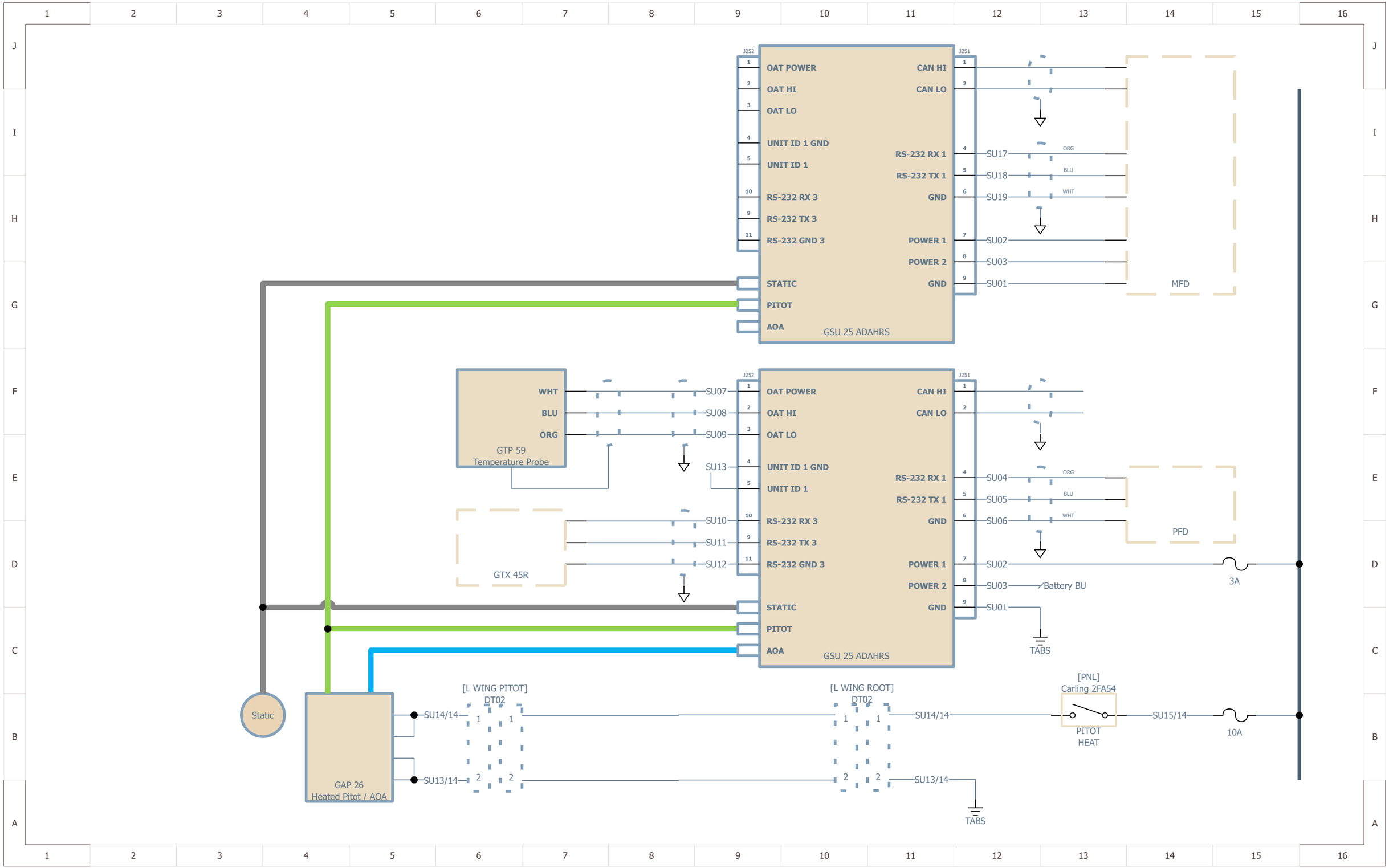
J252
OAT POWER
OAT HI
OAT LO
UNIT ID 1 GND
UNIT ID 1
RS-232 RX 3
RS-232 TX 3
RS-232 GND 3
STATIC
PITOT
AOA
J251
CAN HI
CAN LO
RS-232 RX 1
RS-232 TX 1
GND
POWER 1
POWER 2
GND
GSU 25 ADAHRS
SU17
SU18
SU19
SU02
SU03
SU01
ORG
BLU
WHT
MFD
WHT
BLU
ORG
GTP 59
Temperature Probe
SU07
SU08
SU09
SU13
SU10
SU11
SU12
GTX 45R
SU04
SU05
SU06
PFD
Battery BU
3A
TABS
Static
GAP 26
Heated Pitot / AOA
SU14/14
SU13/14
[L WING PITOT]
DT02
[L WING ROOT]
DT02
[PNL]
Carling 2FA54
PITOT
HEAT
SU15/14
10A

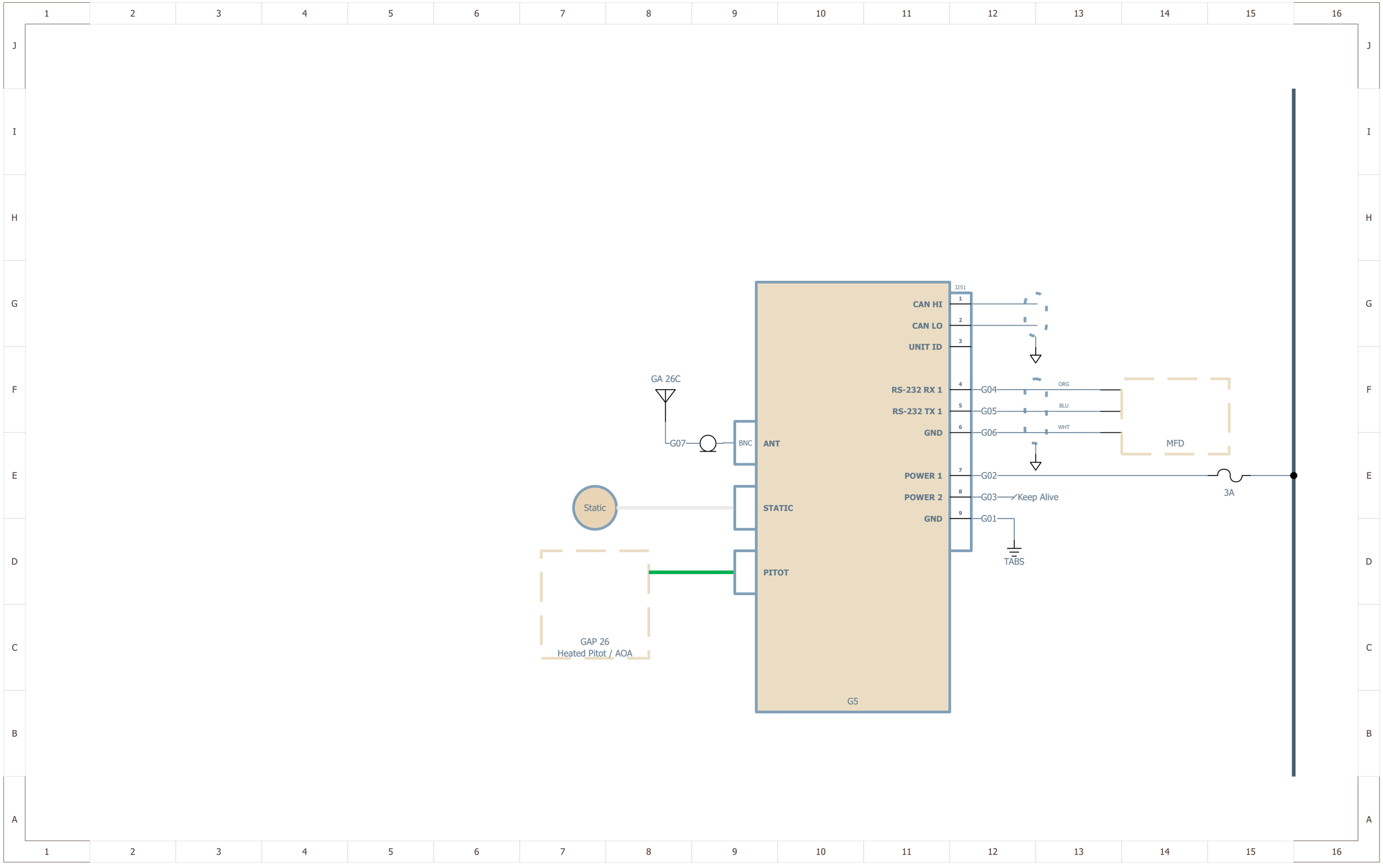
J251
CAN HI
CAN LO
UNIT ID
RS-232 RX 1
RS-232 TX 1
GND
POWER 1
POWER 2
GND
ANT
STATIC
PITOT
G5
1
2
3
4
5
6
7
8
9
G04
G05
G06
G02
G03
G01
ORG
BLU
WHT
Keep Alive
MFD
3A
TABS
GA 26C
G07
BNC
Static
GAP 26
Heated Pitot / AOA

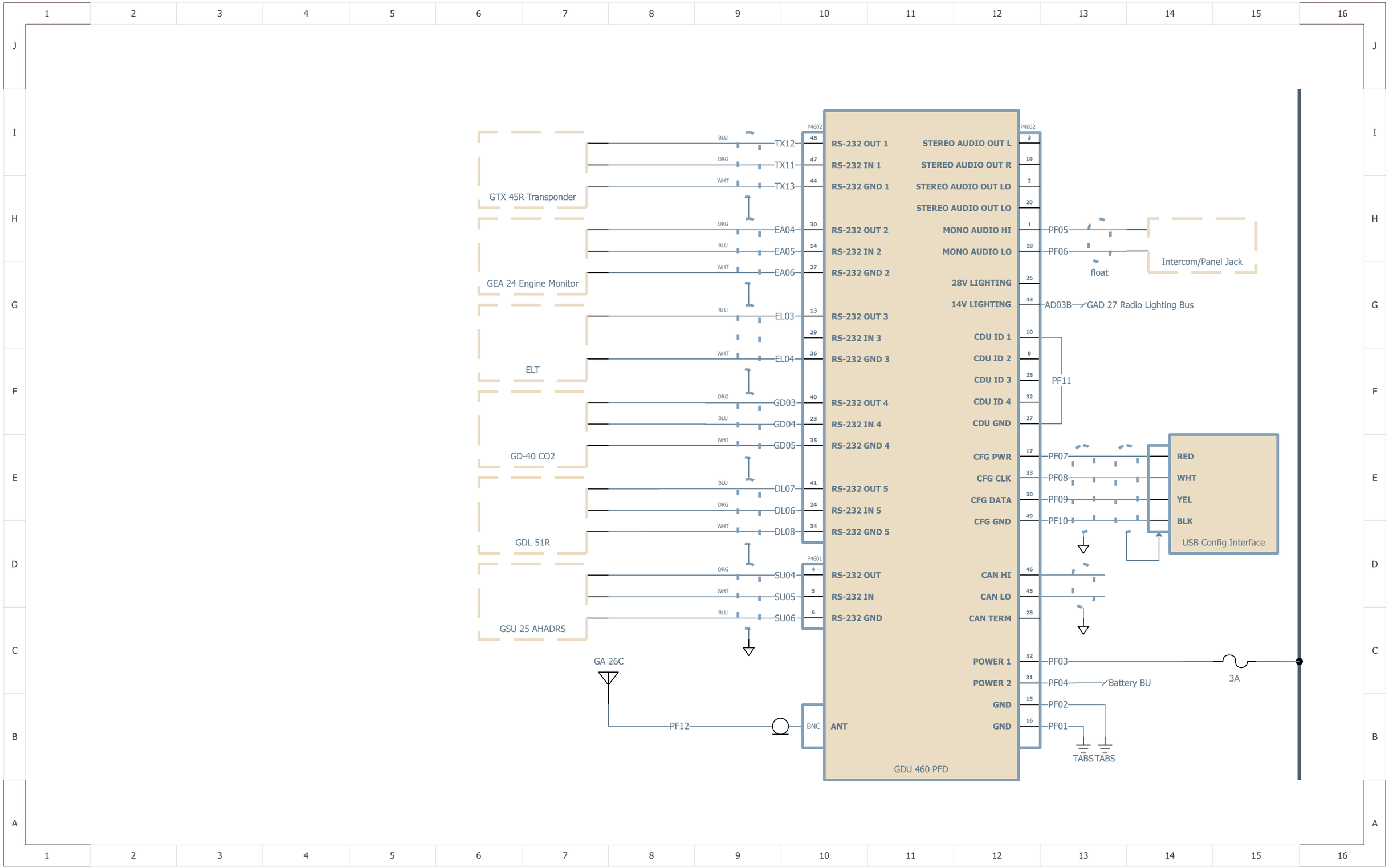
GTX 45R Transponder
GEA 24 Engine Monitor
ELT
GD-40 CO2
GDL 51R
GSU 25 AHADRS
GA 26C
PF12
BNC
ANT
P4602
P4601
TX12
TX11
TX13
EA04
EA05
EA06
EL03
EL04
GD03
GD04
GD05
DL07
DL06
DL08
SU04
SU05
SU06
BLU
ORG
WHT
RS-232 OUT 1
RS-232 IN 1
RS-232 GND 1
RS-232 OUT 2
RS-232 IN 2
RS-232 GND 2
RS-232 OUT 3
RS-232 IN 3
RS-232 GND 3
RS-232 OUT 4
RS-232 IN 4
RS-232 GND 4
RS-232 OUT 5
RS-232 IN 5
RS-232 GND 5
RS-232 OUT
RS-232 IN
RS-232 GND
STEREO AUDIO OUT L
STEREO AUDIO OUT R
STEREO AUDIO OUT LO
STEREO AUDIO OUT LO
MONO AUDIO HI
MONO AUDIO LO
28V LIGHTING
14V LIGHTING
CDU ID 1
CDU ID 2
CDU ID 3
CDU ID 4
CDU GND
CFG PWR
CFG CLK
CFG DATA
CFG GND
CAN HI
CAN LO
CAN TERM
POWER 1
POWER 2
GND
GND
PF05
PF06
float
Intercom/Panel Jack
AD03B
GAD 27 Radio Lighting Bus
PF11
PF07
PF08
PF09
PF10
RED
WHT
YEL
BLK
USB Config Interface
PF03
3A
PF04
Battery BU
PF02
PF01
TABS
TABS
GDU 460 PFD

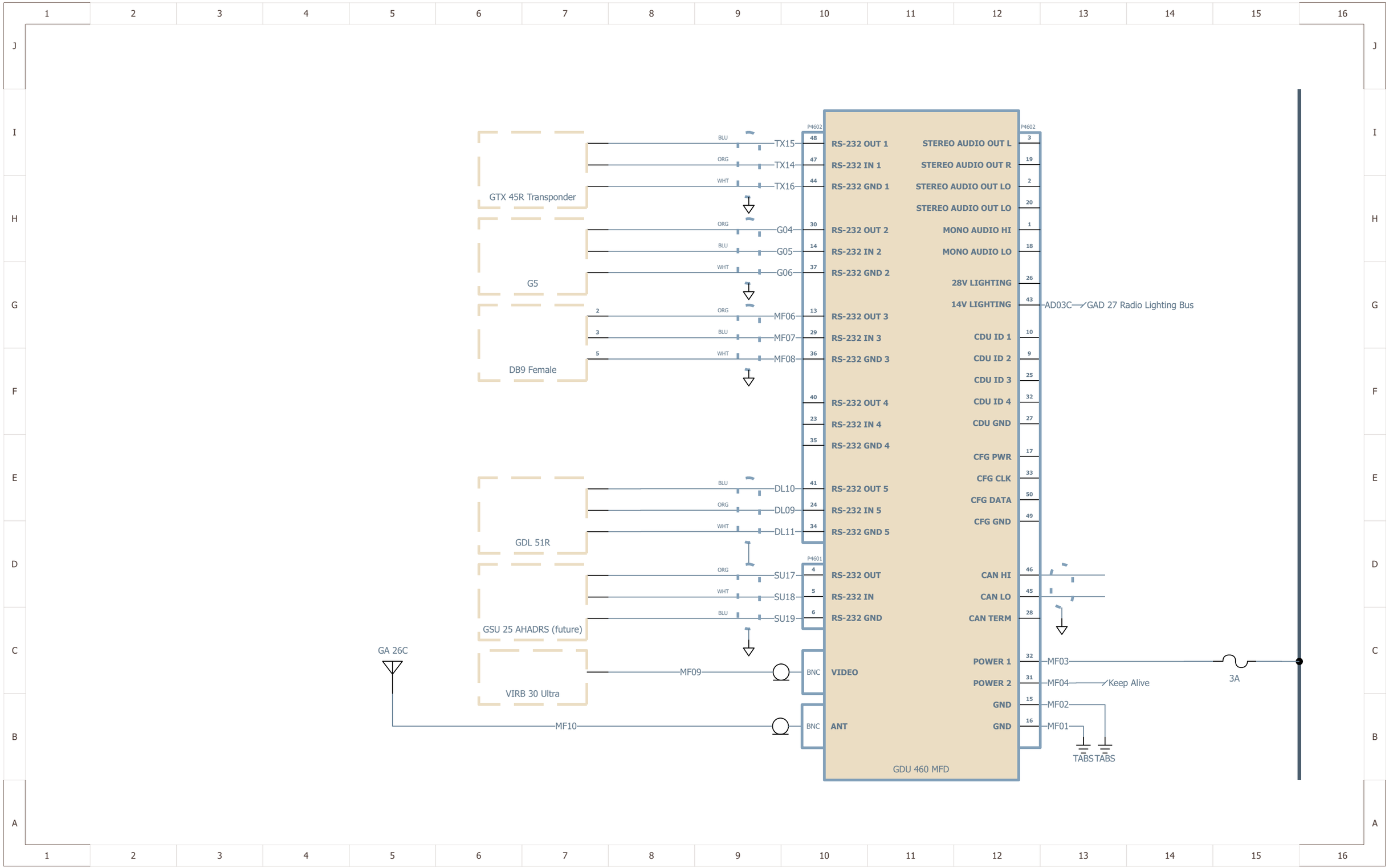
GTX 45R Transponder
G5
DB9 Female
GDL 51R
GSU 25 AHADRS (future)
VIRB 30 Ultra
GA 26C
TX15
TX14
TX16
G04
G05
G06
MF06
MF07
MF08
DL10
DL09
DL11
SU17
SU18
SU19
MF09
MF10
BLU
ORG
WHT
P4602
P4601
RS-232 OUT 1
RS-232 IN 1
RS-232 GND 1
RS-232 OUT 2
RS-232 IN 2
RS-232 GND 2
RS-232 OUT 3
RS-232 IN 3
RS-232 GND 3
RS-232 OUT 4
RS-232 IN 4
RS-232 GND 4
RS-232 OUT 5
RS-232 IN 5
RS-232 GND 5
RS-232 OUT
RS-232 IN
RS-232 GND
BNC
VIDEO
ANT
STEREO AUDIO OUT L
STEREO AUDIO OUT R
STEREO AUDIO OUT LO
STEREO AUDIO OUT LO
MONO AUDIO HI
MONO AUDIO LO
28V LIGHTING
14V LIGHTING
CDU ID 1
CDU ID 2
CDU ID 3
CDU ID 4
CDU GND
CFG PWR
CFG CLK
CFG DATA
CFG GND
CAN HI
CAN LO
CAN TERM
POWER 1
POWER 2
GND
GND
AD03C
GAD 27 Radio Lighting Bus
MF03
MF04
Keep Alive
MF02
MF01
3A
TABS
TABS
GDU 460 MFD

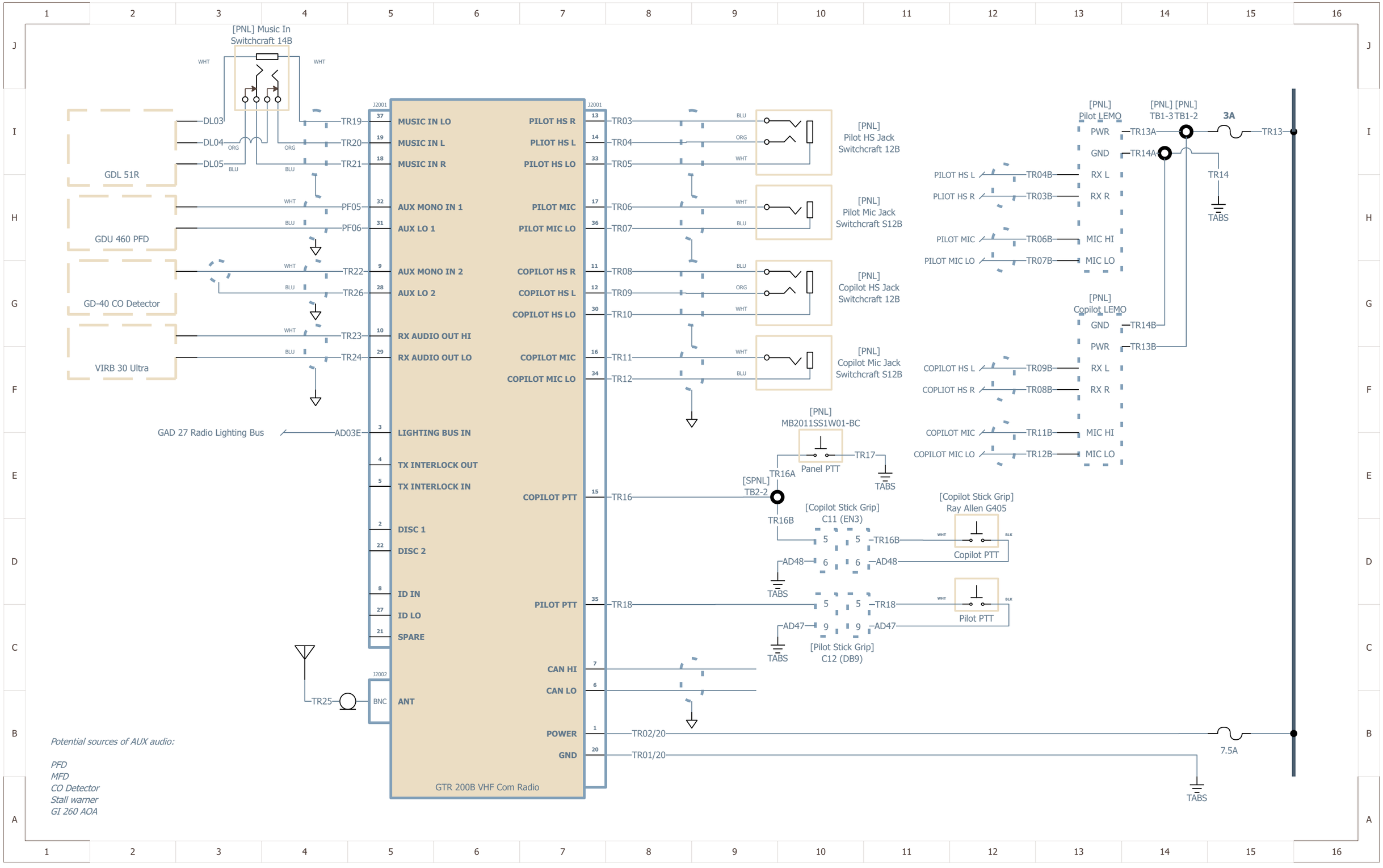
[PNL] Music In
Switchcraft 14B
WHT
WHT
GDL 51R
DL03
DL04
DL05
ORG
ORG
BLU
BLU
GDU 460 PFD
GD-40 CO Detector
VIRB 30 Ultra
TR19
TR20
TR21
PF05
PF06
TR22
TR26
TR23
TR24
GAD 27 Radio Lighting Bus
AD03E
J2001
MUSIC IN LO
MUSIC IN L
MUSIC IN R
AUX MONO IN 1
AUX LO 1
AUX MONO IN 2
AUX LO 2
RX AUDIO OUT HI
RX AUDIO OUT LO
LIGHTING BUS IN
TX INTERLOCK OUT
TX INTERLOCK IN
DISC 1
DISC 2
ID IN
ID LO
SPARE
J2002
BNC
ANT
TR25
PILOT HS R
PLIOT HS L
PILOT HS LO
PILOT MIC
PILOT MIC LO
COPILOT HS R
COPILOT HS L
COPILOT HS LO
COPILOT MIC
COPILOT MIC LO
COPILOT PTT
PILOT PTT
CAN HI
CAN LO
POWER
GND
GTR 200B VHF Com Radio
TR03
TR04
TR05
TR06
TR07
TR08
TR09
TR10
TR11
TR12
TR16
TR18
TR02/20
TR01/20
BLU
ORG
WHT
[PNL]
Pilot HS Jack
Switchcraft 12B
[PNL]
Pilot Mic Jack
Switchcraft S12B
[PNL]
Copilot HS Jack
Switchcraft 12B
[PNL]
Copilot Mic Jack
Switchcraft S12B
[PNL]
MB2011SS1W01-BC
Panel PTT
TR17
TABS
TR16A
[SPNL]
TB2-2
TR16B
[Copilot Stick Grip]
C11 (EN3)
[Copilot Stick Grip]
Ray Allen G405
Copilot PTT
AD48
TR16B
AD48
TABS
TR18
TR18
Pilot PTT
AD47
AD47
TABS
[Pilot Stick Grip]
C12 (DB9)
[PNL]
Pilot LEMO
PWR
GND
RX L
RX R
MIC HI
MIC LO
TR13A
TR14A
[PNL] [PNL]
TB1-3 TB1-2
3A
TR13
TR14
TABS
PILOT HS L
PLIOT HS R
PILOT MIC
PILOT MIC LO
TR04B
TR03B
TR06B
TR07B
[PNL]
Copilot LEMO
GND
PWR
TR14B
TR13B
COPILOT HS L
COPLIOT HS R
COPILOT MIC
COPILOT MIC LO
TR09B
TR08B
TR11B
TR12B
7.5A
TABS
Potential sources of AUX audio:
PFD
MFD
CO Detector
Stall warner
GI 260 AOA

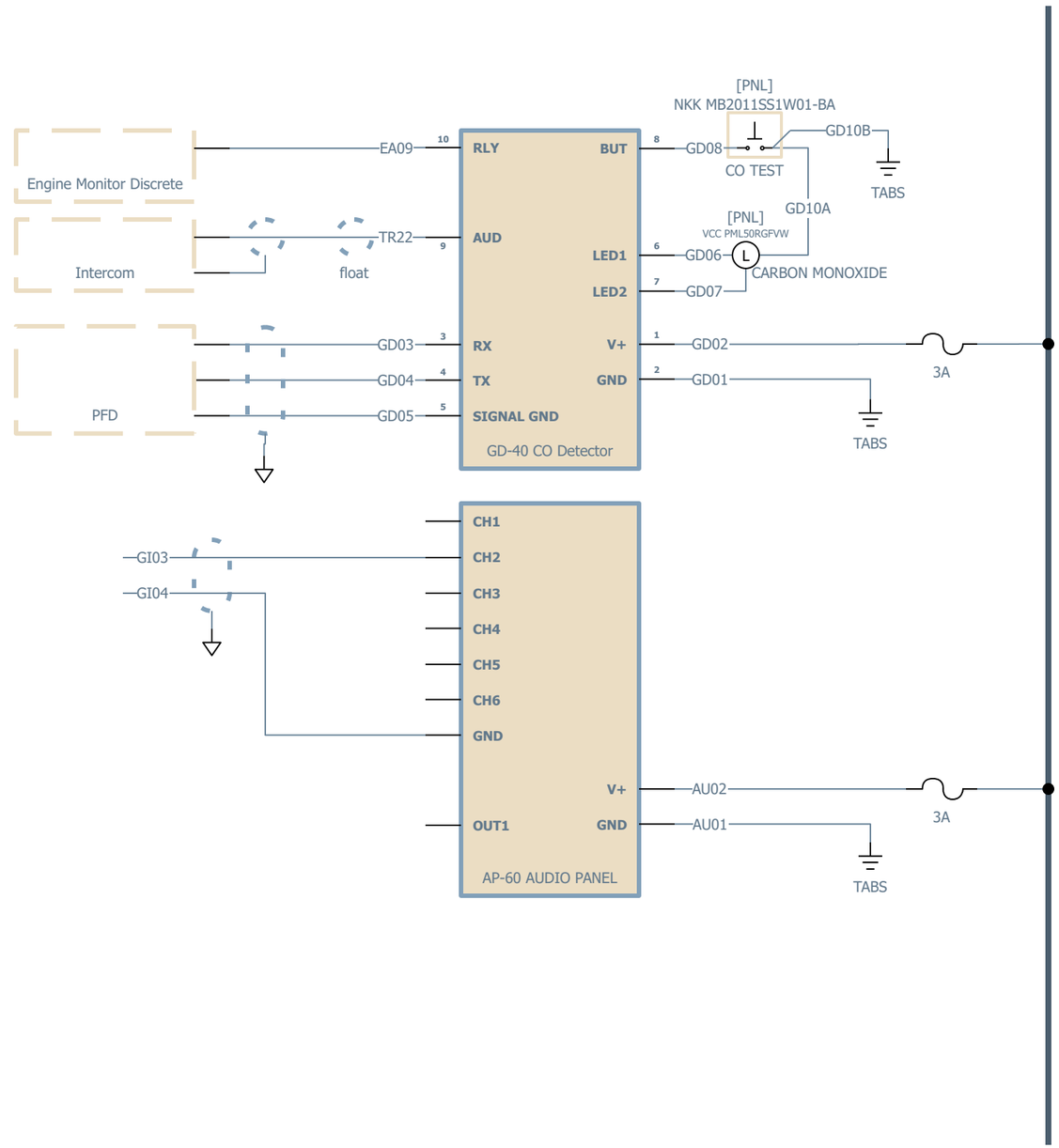
Engine Monitor Discrete
Intercom
PFD
EA09
TR22
float
GD03
GD04
GD05
RLY
AUD
RX
TX
SIGNAL GND
BUT
LED1
LED2
V+
GND
GD-40 CO Detector
[PNL]
NKK MB2011SS1W01-BA
GD08
GD10B
CO TEST
TABS
GD10A
[PNL]
VCC PML50RGFVW
GD06
GD07
CARBON MONOXIDE
GD02
GD01
3A
TABS
GI03
GI04
CH1
CH2
CH3
CH4
CH5
CH6
GND
V+
OUT1
GND
AP-60 AUDIO PANEL
AU02
AU01
3A
TABS

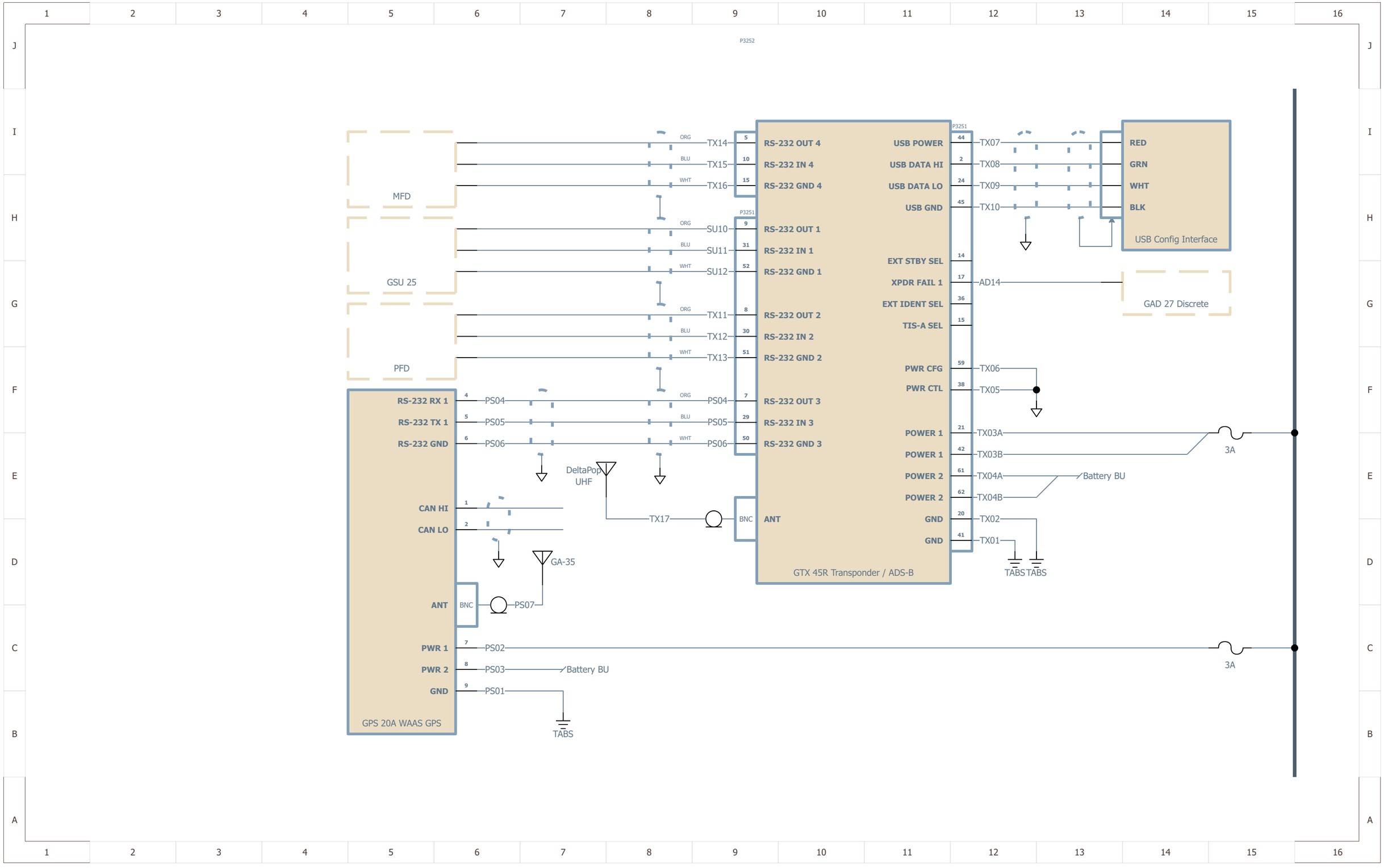
P3252
MFD
GSU 25
PFD
ORG
BLU
WHT
TX14
TX15
TX16
SU10
SU11
SU12
TX11
TX12
TX13
PS04
PS05
PS06
RS-232 RX 1
RS-232 TX 1
RS-232 GND
CAN HI
CAN LO
ANT
BNC
PS07
PWR 1
PWR 2
GND
PS02
PS03
PS01
Battery BU
TABS
GPS 20A WAAS GPS
DeltaPop
UHF
GA-35
TX17
P3251
RS-232 OUT 4
RS-232 IN 4
RS-232 GND 4
RS-232 OUT 1
RS-232 IN 1
RS-232 GND 1
RS-232 OUT 2
RS-232 IN 2
RS-232 GND 2
RS-232 OUT 3
RS-232 IN 3
RS-232 GND 3
USB POWER
USB DATA HI
USB DATA LO
USB GND
EXT STBY SEL
XPDR FAIL 1
EXT IDENT SEL
TIS-A SEL
PWR CFG
PWR CTL
POWER 1
POWER 1
POWER 2
POWER 2
GND
GND
TX07
TX08
TX09
TX10
AD14
TX06
TX05
TX03A
TX03B
TX04A
TX04B
TX02
TX01
GTX 45R Transponder / ADS-B
RED
GRN
WHT
BLK
USB Config Interface
GAD 27 Discrete
3A

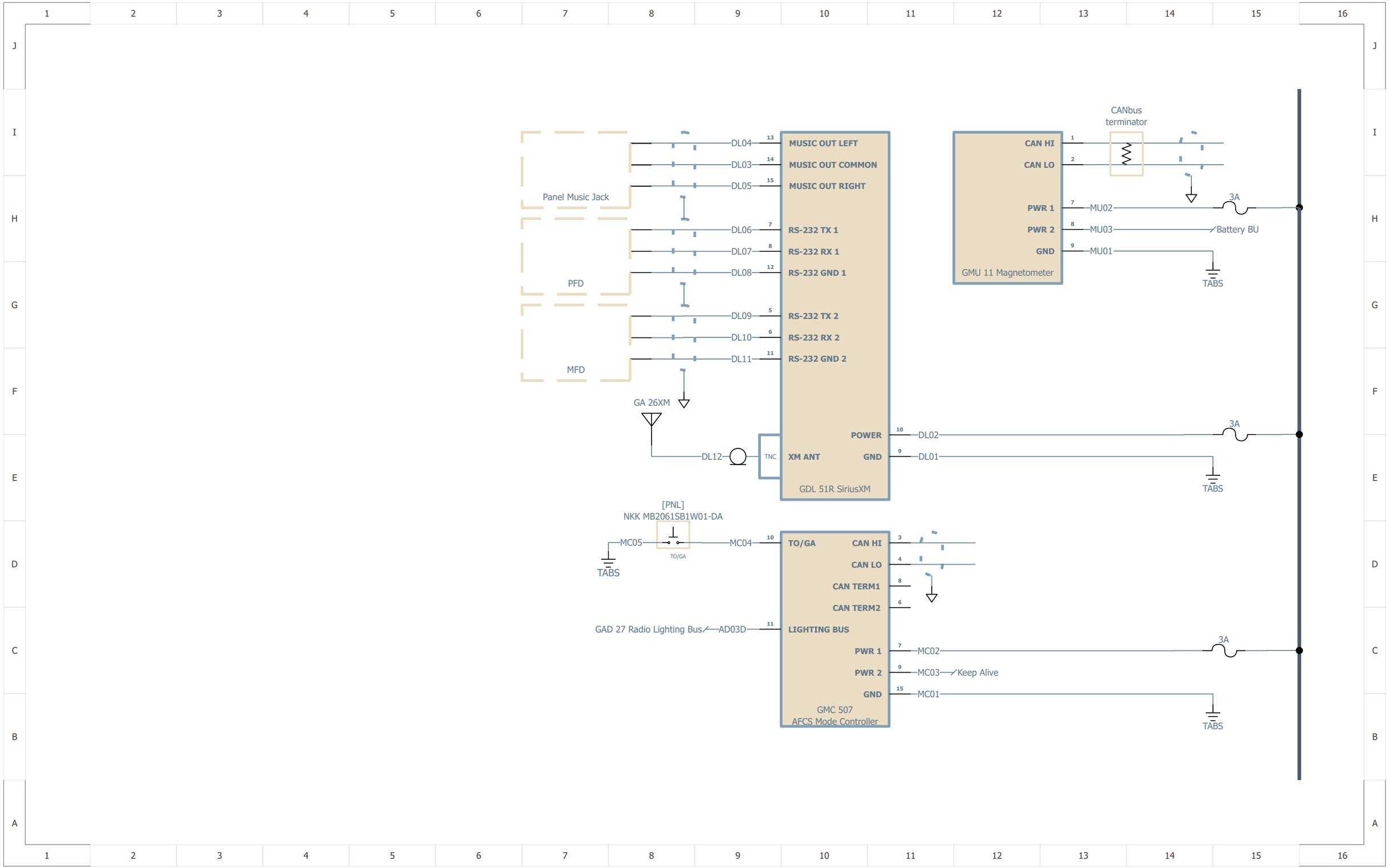
Panel Music Jack
PFD
MFD
DL04
DL03
DL05
DL06
DL07
DL08
DL09
DL10
DL11
MUSIC OUT LEFT
MUSIC OUT COMMON
MUSIC OUT RIGHT
RS-232 TX 1
RS-232 RX 1
RS-232 GND 1
RS-232 TX 2
RS-232 RX 2
RS-232 GND 2
GA 26XM
DL12
TNC
XM ANT
POWER
GND
DL02
DL01
GDL 51R SiriusXM
CANbus
terminator
CAN HI
CAN LO
PWR 1
PWR 2
GND
MU02
MU03
MU01
3A
Battery BU
TABS
GMU 11 Magnetometer
[PNL]
NKK MB2061SB1W01-DA
MC05
MC04
TO/GA
GAD 27 Radio Lighting Bus
AD03D
LIGHTING BUS
CAN TERM1
CAN TERM2
MC02
MC03
MC01
Keep Alive
GMC 507
AFCS Mode Controller

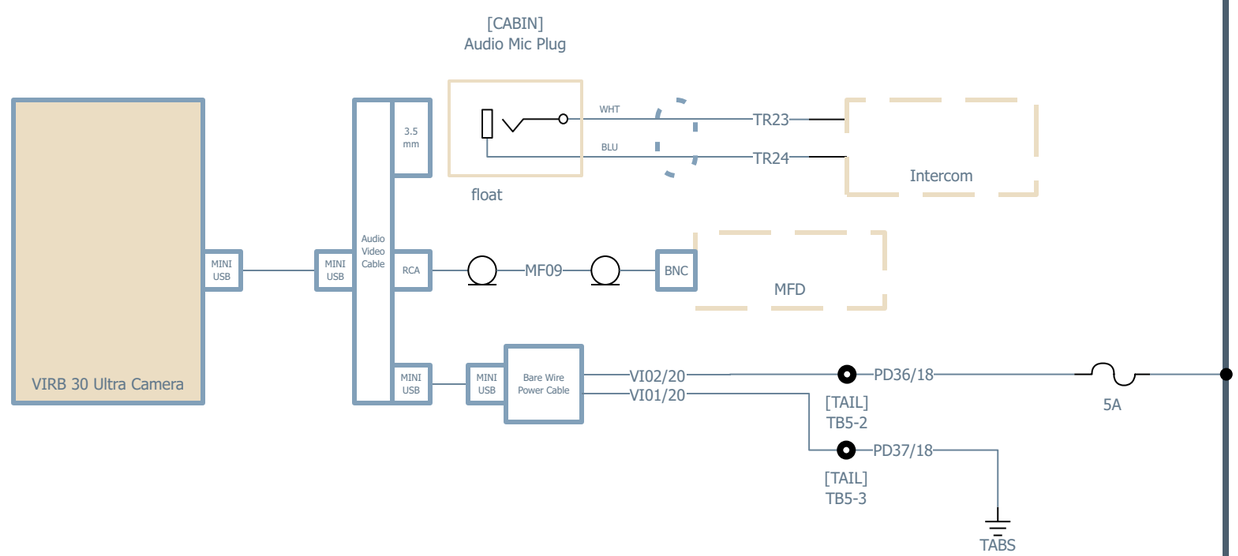
[CABIN]
Audio Mic Plug
WHT
BLU
TR23
TR24
Intercom
float
3.5 mm
VIRB 30 Ultra Camera
MINI USB
MINI USB
Audio Video Cable
RCA
MF09
BNC
MFD
MINI USB
MINI USB
Bare Wire Power Cable
VI02/20
VI01/20
PD36/18
[TAIL]
TB5-2
PD37/18
[TAIL]
TB5-3
5A
TABS